STORM WATER MANAGEMENT PLAN

GENERAL COMPLIANCE STANDARDS AND NPDES PHASE II REQUIREMENTS
FOR STORM WATER DRAINAGE SYSTEM DESIGN
FOR DEVELOPMENT AND REDEVELOPMENT PROJECTS
WITHIN SAGINAW CHARTER TOWNSHIP
RELEVANT TO NPDES COC MIG610166

SAGINAW CHARTER TOWNSHIP
SAGINAW COUNTY, MICHIGAN

Prepared By:

Revised November 2012

TABLE OF CONTENTS

APPENDIX A

APPENDIX B

APPENDIX C

APPENDIX D

APPENDIX E

APPENDIX F

APPENDIX G

APPENDIX H

1. INTRODUCTION

The Objective of the Storm Water Management Plan

The purpose of developing this plan is to aid developers in the design of their storm water runoff collection and detention systems and to meet NPDES Phase II stormwater regulations of the Townships NPDES permit MIG610166. Current storm water management requirements are in the form of Township policies as related to the Township's storm water management ordinance (Ordinance No. 583 current, adopted June 15, 1998, original ordinance is No. 321, adopted on July 14, 1980). This storm water management plan will formalize these policies to allow for a more uniform application of the guidelines. The revisions within this document were approved by resolution on September 8, 2003, see Appendix D.

The Storm Water Management Plan, also known as Post Construction Controls in the NPDES Phase II terminology, establishes the framework through which detention measures and the design of storm water collection systems and BMPs for stormwater quality will be implemented and details the process that must be followed to gain approval for new developments and redevelopment projects. The plan requires storm water management design practices that will help to minimize the impacts of proposed development or redevelopment projects on the existing drainage system. In addition, these guidelines will help to insure adequate drainage systems are being constructed for future development in the Township. The following types of developments and earth changes require a Storm Water Management Plan:

1. Land development proposals subject to site plan review requirements in the Township Zoning Ordinance.

2. Subdivision plat proposals.

3. Site Condominium developments pursuant to the Condominium Act, P.A. 59 of 1978 as amended; MCLA 559.101 et.seq.

4. Any development on property divided by land division in connection with which one or more public or private roads are created or extended, and/or in connection with which more than three parcels of less than one acre are created.

5. Any proposal to mine, excavate, or clear and grade or otherwise develop one acre or more land for purposes other than routine single family residential landscaping and gardening, or any proposal within 500 feet of an inland lake, river, or stream.

6. Any non-residential project placing more than 1600 cubic yards of fill material on a parcel 1 acre or more in size and alters grade or blocks / disrupts historic flow patterns.

7. Redevelopment on a site (even if less than 1 acre) that alters the imperviousness percentage of the site.

8. Projects that alter historic flow paths or patterns from a neighboring parcel must make provisions to pass the water through the site; this flow can be passed unrestricted in most cases.

The Storm Water Management Plan provides detailed information about the Township's storm drainage system and explains the Township's proactive approach to the management and quality of storm water. The Storm Water Management Ordinance defines the means of implementing the Plan. This section revised, November 2012.

The Storm Water Management Plan includes:

1. A summary of the administrative procedures to be followed to comply with the plan, including meeting requirements, review procedures, inspection requirements, fee schedule, issuance of the permit, penalties and enforcement, and other agency requirements.
2. A description of design calculations.
3. A description of design standards, storm water quality guidelines and a maintenance plan.
4. A summary of existing drainage conditions within the Township. (Appendix A)

The Need for Storm Water Management in Saginaw Charter Township

Saginaw Charter Township has been managing storm water runoff under the existing ordinance since 1980 in an effort to reduce the risk of overloading the storm drainage systems located within the Township. In the continuing effort to minimize impacts to the existing storm drainage system and to provide adequate drainage in the future, the Township has prepared this formalized Storm Water Management Plan. Additionally, this Storm Water Management Plan will now address storm water quality issues as brought out in Watershed Management Plans developed by the Saginaw Area Storm Water Authority or in compliance with Saginaw Charter Township's NPDES stormwater discharge permit MIG610166.

The History of Saginaw Charter Township's Existing Storm Water Ordinance

Saginaw Charter Township has been performing storm water management under the requirements of Ordinance No. 321, adopted July 14, 1980. This ordinance provides for the establishment of storm drain outlet capacities, the imposition and collection of readiness to serve charges in special assessment drainage districts, the enforcement of capacity limitations, and for any other matters relative to storm water drainage systems.

Ordinance No. 321 was replaced on June 15, 1998 by Ordinance No. 583 (Appendix D) as part of this Storm Water Management Plan. This Ordinance will specifically refer to the current Storm Water Management Plan for requirements and guidelines concerning storm water management within the Township. Changes to the storm water management plan will be adopted through resolution.

Administration of the Storm Water Discharge Permit & Management Plan

The Storm Water Management Plan will be implemented and operated by the Saginaw Charter Township Department of Community Development. The Department will be responsible for the review of new development and redevelopment plans and for the installation and maintenance of measures within the Township to accomplish the plan. The Department will work in conjunction with Township Administration, the County Public Works Commissioner, the County Road Commission, architectural and engineering consultants, landowners, and developers within the Township.

II. ADMINISTRATION

A. Definitions

For the purpose of this Storm Water Management Plan, the following definitions are adopted:

1. *Allowable Discharge*: The maximum flow rate that can be discharged from a site, as calculated for design criteria in accordance with this Storm Water Management Plan.

2. *Base Flood Elevation*: The 100-year flood elevation as determined from Flood Insurance Rate Maps (FIRMs) or the best available information.

3. *Best Management Practices (BMPs)*: Structural, vegetative or managerial practices used to protect and improve our surface waters and groundwaters. (Amended, 2002)

4. *Bio-filtration*: a system comprised of native plants and amended soils with an underdrain that goes to a detention area. The system is designed to receive storm water runoff and clean it via a filtration process and slow the runoff by letting it percolate through the amended soils to reach an underdrain, which then conveys it to a detention area. The system is designed to remove sediment and pollutants from storm water before discharge. (Amended November, 2012)

5. *Bio-swales:* Drainage channels that divert runoff water from the storm sewer into a natural area where native wetland plants help absorb and recycle it. Plants like grasses, rushes, native plants, other water and drought tolerant flowers and bushes are commonly found in bioswales because they help to trap the water and force it to absorb, rather than flowing through the bio-swale to the other side. It should be noted that these systems are generally dry most of the time and do not have standing water in them. (Amended November, 2012)

6. *Conduit*: Any channel, pipe, sewer or culvert used for the conveyance or movement of water, whether open or closed.

7. *Control Elevation*: Contour lines and points of predetermined elevation used to

denote a detention storm area on a plat or site drawing.

8. *Detention Facility*: A facility constructed to provide detention storage.

9. *Detention Storage*: The temporary detaining or storage of storm water in a storage basin, on rooftops, in streets, parking lots, school yards, parks, open space, or other areas under predetermined and controlled conditions, with the rate of drainage therefrom regulated to the allowable discharge by appropriately installed devices. These detention storage areas are not be considered regulated wetlands as they are man-made structures and designed specifically for stormwater storage.

10. *Developer/Owner Engineer*: The engineering company formally designated by the Developer/Owner to act as their Engineer.

11. *Development*: The construction of a building, parking lot, structure, etc. on a piece of land or otherwise changing the use of a piece of land.

12. *Discharge*: The release or outflow of water from any source.

13. *Drainage Area*: The area from which storm water runoff is conveyed to a single outlet (i.e. a watershed or catchment area).

14. *Easemen*t: A parcel of land on which the owner has granted rights-of-way to make surveys, construct, maintain, operate, alter, replace, repair, and remove at any time that part of the storm drainage system located within the easement. The landowner will not be allowed to construct buildings or other structures on said easement without the written consent of the easement grantee.

15. *Emergency Overflow:* A hydraulic control structure used to control the location and flow direction of storm water which is either in excess of the required detention storage or is due to a failure in the site's storm water management system. The emergency overflow shall be directed to a public road right-of-way or to an available municipal storm drainage system. This feature must be labeled on the design plans and an elevation provided. It is the design engineer's responsibility to assure no detrimental effects to neighboring parcels. (Amended November, 2012)

16. *Emergency Overflow Elevation:* The elevation at which emergency overflow is activated. This elevation is recommended to be at least one foot below finished floor elevation of nearby buildings, even if on adjacent parcels. (Amended November, 2012)

17. *Excess Storm Water Runoff*: The volume and rate of flow of storm water discharged from a drainage area, which is in excess of the allowable discharge.

18. *Floodplain*: The special flood hazard lands adjoining a water-course, the surface elevation of which is lower than the Base Flood Elevation and is subject to

periodic inundations determined from Flood Insurance Rate Maps (FIRMs) or the best available information. A parcel of land can be located within a floodplain without being shown on a FIRM map.

19. *First Flush*: Is the volume of 0.5 inch of rain over the area of a site. The first flush of a rain event typically carries the most pollutants to our storm sewer system and ultimately to our rivers, lakes and streams. The first flush volume must be discharge over a 12-hour period of time to settle out pollutant loads. (Amended November, 2012)

20. *Impervious Factor* (**IF**): The percentage of impervious surface specific to a site that the existing storm drain outlet has been historically designed to convey. The **IF** is used to calculate the allowable discharge from a site. **The Impervious Factor is not to be confused with impervious percentage, it is not the same variable.** Proposed developments or redevelopments will not be allowed to discharge storm water at a rate which is greater than the runoff that would occur from the site with the percentage of impervious surfaces defined by the impervious factor. **IF'**s have been established for the existing drains and storm sewer systems located within the Township (See Table I, Page A1, or attached drawing).

21. *Impervious Surface*: A surface that does not easily allow the infiltration or penetration of water. During rainstorm events, a large percentage of water will runoff. (typically considered as roof tops, paved walks, roadways, driveways, sidewalks, parking lots, etc.)

22. *Low Impact Development:* Implementation of developmental strategies or best management practices in a manner that maintains predevelopment hydrology, or decreases runoff quantity, and improves runoff quality. Use of Michigan's Low Impact Development Design Manual is recommended for design purposes, located at: http://www.semcog.org/LowImpactDevelopment.aspx

23. *NPDES*: National Pollutant Discharge Elimination System. In 1987 the Clean Water Act (CWA) was amended and required to implement a program that would address pollutants being discharged to the nation's waters. This now includes storm water discharges into waters of the nation/state. Saginaw Charter Township has an NDPES stormwater discharge permit as required by the State of Michigan in compliance with the CWA.

24. *Peak Flow*: The maximum rate of flow of storm water runoff at a given location.

25. *Percent Imperviousness* (**IMP**): The actual proposed percentage of impervious surface for a proposed development or redevelopment. The **IMP** is used to calculate the design discharge (**Q_d**). The design discharge is used to determine storm sewer sizes and required detention volumes. Minimum impervious factors have been established for various zoned land uses (See Table II, Page A21).

26. *Pervious Surface*: A surface that allows infiltration or penetration of water. During rainstorm events, a percentage of water will infiltrate into the surface

with the remaining storm water running off. The percentage of runoff is dependent on the type, slope, percent saturation, etc. of the surface. (i.e. lawns, farm fields, parks, wooded areas, golf courses, etc.). Design personnel should attempt to maximize these surfaces as much as possible. (Amended, 2002)

27. *Rain Gardens*: A depressed area of a size that is determined by specified engineering guidelines with amended soils and specific plants, shrubs, and trees that have a specific volume to store storm water runoff. The site can be underdrained to increase performance. Use of Michigan's Low Impact Development Design Manual is recommended for design purposes, located at: http://www.semcog.org/LowImpactDevelopment.aspx

28. *Rear lot drainage:* A storm water system designed to provide drainage in rear lot areas to prevent water from ponding for extended periods of time. It must be noted that these systems are not designed to convey storm water in a rapid manner. It is a deliberately designed system that can provide additional detention capabilities during severe runoff conditions. It is a system that in condo or subdivisions is the responsibility of the owners to maintain. Rear Lot systems are **not** the township's responsibility. The township may repair the system if necessary to prevent damage to neighboring properties, but all associated repair costs, plus a 20% administrative fee will be passed on to the owner of the property or home/condo owners association where the repair takes place. (Amended November, 2012)

29. *Restrictor:* A hydraulic control structure used to restrict the storm water discharge from the site to the allowable discharge of the site as determined by this plan. Simple restrictors such as the orifice or metering line are outlined in this plan. For more complex restrictors a stage/storage/discharge relation shall be required in the complete submittal and may alter the storage requirements for the site. (Amended November, 2012)

30. *Redevelopment*: Altering, improving, reconstructing or otherwise changing the use of an existing developed property. A site will be considered a redevelopment for this Storm Water Management Plan when an area greater than or equal to 5% of the existing developed portion of the site (i.e. roof, gravel, & paved surfaces) or, an area greater than 20,000 square feet is increased or reconstructed with roof, pavement, or any other impervious surface. NOTE: this percentage is cumulative. If redevelopment is 2% one year and 3% at another time, this will meet the 5% rule. Also, at times, less than 5% can create drainage problems and the Township Engineer may require additional detention or storage based on historical or anecdotal problems on a site. (Amended, 2002)

31. *Retention Storage*: The permanent retaining or storage of storm water in a storage basin, on rooftops, in streets, parking lots, school yards, parks, open space, or other areas under predetermined and controlled conditions. The only discharge of storm water from the retention storage area is by ground infiltration,

evaporation, etc. An emergency overflow must be provided in the event the capacity of the retention facility is exceeded. These retention storage areas shall not be considered regulated wetlands.

32. *Saginaw Area Storm Water Authority (SASWA):* The SASWA was formed by the NPDES Phase II communities in Saginaw County. The Authority, of which Frankenmuth is not a member, provides communities with information on storm water education, issues and regulations. A website address is: www.saswa.org . (Amended November, 2012)

33. *Saginaw County Land Development Advisory Committee*: The advisory committee shall include a member of the Saginaw County Road Commission, Saginaw County Public Works Commission, and the municipality involved. The goal of the committee is to arrive at a mutual understanding of the procedures, standards, and/or requirements as they may apply to the proposed development. Refer to Saginaw County Advisory Committee Policy Statement in Appendix C. (Amended, 2002)

34. *Storm Water Runoff*: The water from a rainstorm or snowmelt, which flows over the surface of the ground or is collected in a drainage system.

35. *Sub-Surface Detention Storage:* Detention storage that is provided in underground storage facilities such as pipes, arch systems (Cultec, Stormtech or similar), or tanks. Detention storage within aggregate bedding will not be accepted unless geo fabric is used to keep sediment out of the void spaces. (Amended November, 2012)

36. *Ten-Year Design Storm*: A precipitation event with a duration equal to the time of concentration, having a ten percent probability of occurring in any given year or occurring once every 10 years on average. This amounts to approximately 3.05 inches of rain in 24 hours. But, brief, intense storms of 10 year design can range from 1.5 inches in 1 hour to 2.87 inches in 18 hours. (Source: Bulletin 71, Rainfall Frequency Atlas of the Midwest, F.A. Huff & J.R. Angel, 1992)

37. *Time of Concentration (T_c)*: The elapsed time for storm water runoff to flow from the most hydraulically distant point in a drainage area to the outlet or other predetermined point.

38. *Township Engineer*: The engineering firm formally designated by Saginaw Charter Township to act as their Engineer.

39. *Underdrain:* Consists of perforated drainage tile with either slot cuts or holes along the lateral haunch and covered with a sock or other means to prevent sediment from entering the pipe. These drains are placed below the grade of detention basins that have flat slopes to assure complete drainage of the detention basin or other structure. This will prevent the basin from being continuously wet and allow for mowing of the basin or care of the structure. Also used in

underground storage systems to prevent ground water from taking up storage volumes. This will apply to basins that do not meet the 1% minimum slopes for the bottom of the basin. See detail in Appendix E.

40. *Upland Area*: Land located in the upper portion of a watershed whose surface drainage flows toward the area being considered for development.

41. *Urbanization*: The development, change, or improvement of any parcel of land consisting of one or more lots for residential, commercial, industrial, institutional, recreational, or public utility purposes.

42. *Urbanized Area*: An area designated by the US Census Bureau which has specific rules and regulations concerning storm water under the NPDES Phase II regulations. This regulated area may require adherence to specific water quality standards. There will be a special Appendix for these water quality design issues and best management practices (BMPs). (Amended, 2002)

43. *Watercourse*: Any natural or artificial stream, river, creek, channel, ditch, canal, conduit, culvert, drain, waterway, gully, ravine, street, roadway, swale, or wash in which water flows in a definite direction, either continuously or intermittently.

44. *Waters of the State:* Means any of the following: The Great Lakes bordering the State and their connecting waters, all inland lakes, Rivers, Streams, Impoundments, Open Drains, and other surface bodies of water within the jurisdiction of the state, including wetlands as defined by Part 303 of PA 451 of 1994. In Saginaw Charter Township, that would include the Saginaw River, Tittabawassee River, established county drains and other streams that have a defined bed and bank, and established flow. (Amended November, 2012)

B. Review Procedure

A site will be considered in compliance with Ordinance No. 583 when a review and approval of the site's Storm Water Management Plan has been completed. The Township will not accept runoff into drainage systems located within the Township from newly developed or redeveloped sites without compliance with Ordinance No. 583. **Developers or Builders should not install the storm water system unless they are working from a set of plans that have been stamped as "*APPROVED*"** with appropriate signature from the Township Engineer. (Amended, 2002)

To comply with Ordinance No. 583, complete the following process and deliver or mail all submittals to **Saginaw Charter Township, Community Development, c/o Storm Water Discharge Permit**, 4980 Shattuck Road, PO Box 6400, Saginaw, MI 48608-6400.

1. Pre-design Meeting

The Developer's Engineer shall be responsible for coordinating a pre-design meeting. This meeting, at a minimum, shall consist of the Developer's Engineer, the Township's Engineer, and representatives from the Saginaw County Public Works Commissioner and Saginaw County Road Commission. The purpose of the meeting is to address the various storm water management proposals of the developer. Conceptual storm water management alternatives can be discussed and potential problems addressed prior to the design phase of the project. The goal of the meeting is to eliminate potential problems up front and reduce the time and costs needed for the design and review of the project.
This meeting will be required for all platted developments, condominium and apartment projects, and site developments larger than 5 acres. It is recommended other site development projects have this meeting or, at a minimum, correspond with the Township's Engineer by phone, e-mail, and/or facsimile regarding conceptual design alternatives prior to submitting for formal review.
The Developer's Engineer and/or Township's Engineer should have in his possession, or have an understanding of, the following information prior to attending the pre-design meeting.

a. The drainage district in which the proposed development is located and the design impervious factor for the proposed development. This information can be obtained from the Township Engineer.

b. Small location map showing the section, or part of the section in which the site is situated.

c. Location and description of activities that may impact or be impacted by the proposed development or redevelopment, both on and off the site.

d. Acreage of the total site and an estimate of the area contributing to the proposed storm drainage system. This should include offsite runoff.

e. The size and location of the proposed storm drainage outlet.

f. If known, a conceptual layout of the proposed storm drainage system for the development or redevelopment.

g. Whether the proposed drainage system going to be owned and maintained by a private or public entity.

If required, the Owner/Developer and his/ her technical consultant shall attend a Saginaw County Land Development Advisory Committee (LDAC) meeting. The intention of this meeting is to obtain uniform direction and communication to minimize misdirection of early construction and minimize financial losses to proprietors, developers, and consultants. The application for this meeting can be obtained at the following web site:

http//www.saginawcounty.com/Publicworks/permits_forms.htm.

If the Township's Engineer and the Developer's Engineer agree upon the conceptual layout of the storm drainage system, the Owner/Developer shall begin completing plans and calculations for formal review by the Township.

2. Formal Review (Amended, 2002)

a. The Owner/Developer or representative shall provide a submittal package to Saginaw Township's Community Development Department for formal review, which consists of the following:
   1. Completed **Storm Water Discharge Permit Application** and **Checklist**;
   2. Three (3) sets of plans for the reviewer, **1 set of plans for the Township files;**
   3. Two (2) sets of calculations; **1 set for review and 1 set for the Township files;**
   4. A **maintenance plan** for the storm water management system. (Amended November, 2012)
   5. Any other supporting information.

   Another complete set of this information shall be submitted to the Saginaw County Public Works Commissioner if discharging to an established county drain. The plans, maintenance plan, and calculations will comply with the requirements of this Storm Water Management Plan. The permit application, checklist, design calculations, and design standards to be used during the formal review process are established by this Storm Water Management Plan.

b. Submit deposit/fee for storm water management plan review and inspection to the Community Development Department in accordance with the fee schedule outlined in this plan or on the permit.

c. Formal review and approval will not begin until all items required for application have been received. The proposed drainage system will be approved or rejected with reason and returned to the owner/developer.

e. The Township Engineer will review all plans, calculations, and other information for compliance with the Township's Storm Water Management Plan. All materials will be reviewed for completeness. Calculations will be checked. The minimum design calculations and design standards outlined in this document will be used for review. The permit application and drainage plan checklist will be reviewed.

e. A typical review will take approximately 3 weeks to complete from the date the plan is submitted **in complete form.**

f. If the proposed drainage system is rejected, three sets of plans and calculations will need to be resubmitted with the appropriate revisions. A completed checklist will also have to be resubmitted.

Formal Review for Subdivisions, Condominiums, and Platted Developments: (Amended, 2002)

a. The Owner/Developer or representative shall submit the following to Saginaw Charter Township's Community Development Department for review:

1. **seven sets of plans;**
   - **i. 3 sets for the Saginaw County Public Works Commissioner's engineer**
   - **ii. 3 sets for the Township Engineer, and**
   - **iii. 1 set for the Township.**
2. **three sets of calculations;**
3. **a copy of the completed permit application & checklist;**
4. **a storm water system maintenance plan for review by the Township Engineer.** (Amended November, 2012)
5. **Any other supporting information for the site.**

The plans and calculations shall comply with the requirements of this Storm Water Management Plan. The permit application, checklist, design calculations, and design standards to be used during the formal review process are established by this Storm Water Management Plan.

b. A determination by the owner must be made if the system is to be a private development or a public development. If the roads and utilities are to be turned over to public agencies such as the Road Commission or the Public Works Commissioner, then the following procedure will be used:

1. The Township Engineer will review the rear lot drainage plans (3 sets of plans), any calculations, the storm water permit application, a maintenance plan and other information for compliance with the Township's Storm Water Management Plan.
2. The Saginaw County Public Works Engineer will review all plans (3 sets of plans) calculations, and materials for

completeness. Calculations will be checked. The minimum design calculations and design standards outlined in this document will be used for review. The permit application and drainage plan checklist will be reviewed. The Public Works Engineer may require videotaping of the entire storm water drainage system or portions of the system at their discretion. This cost of this videotaping is the responsibility of the owner or contractor.

c. Submit deposit/fee for storm water management plan review and inspection to the Community Development Department in accordance with the fee schedule outlined in this plan or on the permit.

d. Formal review and approval will not begin until all items required for application have been received. The proposed drainage system will be approved or rejected with reason and returned to the owner/developer.

e. A typical review will take approximately 3 weeks to complete from the date the plan is submitted in complete form.

f. If the proposed drainage system is rejected, three sets of plans and one set of calculations will need to be resubmitted to the reviewing agency with the appropriate revisions. A completed permit application and checklist will also have to be resubmitted.

g. Utility contracts will not be awarded until such time at the storm water management plan is approved.

C. Plan Approval/Issuance of Storm Water Permit

Once the storm water management plan has been approved, the Township Engineer will stamp three copies of the plans "APPROVED". One set will be sent to the applicant, one set will be sent to the Township, and one set will be kept on file with the Township Engineer. A Storm Water Permit will be issued to the applicant by the Township Engineer, and copied to the Township, Township Engineer, and Saginaw County Public Works Commissioner. The maintenance plan after review and final approval will be stamped "APPROVED". One copy will be sent to the owner/applicant, one to the Township, County Public Works Commissioner, and a copy will be kept by the Township Engineer. A copy of this maintenance plan must be kept at the site and implemented. (Amended, November. 2012) The permit will include inspection requirements, compliance requirements, date of issuance, date of expiration, etc. A copy of a sample permit has been included in Appendix B.
NOTE: For Subdivisions, Condominiums, and Platted developments the Township Engineer will issue the storm water permit by coordinating the review with the Saginaw County Public Works Engineer or designee. This permit will only be issued when both reviews (storm drain, detention, rear lot, etc.) are completed and approved.

D. Changes to Plan after Approval

1. Any changes made to the approved plan after issuance of the storm water permit, and before construction begins, shall require three sets of plans for submittal to the Township for review and approval. Another complete set of this information shall be

submitted to the Saginaw County Public Works Commissioner if the system will be turned over to this office.

If the change is minor and occurs in the field during the construction phase, the contractor shall contact the Township Engineer and advise him/her of the change in a written letter. Anything that increases impervious area or affects the rate of discharge from the site may require additional intervention to be decided at the time of occurrence. The Township Engineer may choose to approve modifications by field inspection and a follow up to the Township with a letter approving the modification. The project owner will be invoiced for engineer's time.

2. Upon receipt of this information, it will be determined whether additional information, such as calculations, revised checklist, etc., will be required.

3. The fee for review of any changes to the plan after approval will be billed on an hourly basis. An occupancy permit will not be issued until all changes have been approved and the Township has received all review fees.

E. Inspection/Letter of Certification Requirements

Inspection of storm sewer systems, rear lot systems and/or detention facilities will be required on all development and redevelopment projects. The extent of the inspection will depend on the size and type of the development or redevelopment. Inspection requirements will be outlined in the storm water management permit. Descriptions of the inspection requirements are outlined below. The fees associated with this inspection are included in the original deposit as outlined in Section II.F.

1. *Small Developments/Redevelopments (less than 5 acres*) - A final inspection of the restrictor and the detention storage areas by the Township Engineer will be required. This one-time inspection will be performed at the completion of the project. Subsequent inspections may be required if deficiencies exist.

   The Contractor must complete a letter of certification indicating that the storm drainage system has been constructed as shown on the approved storm water management plans (See Appendix B for certification). An occupancy permit will not be issued until the Township has received a letter of certification and the final inspection of the site has been completed by the Township Engineer. (Amended, 2002)

2. *Large Developments/ Redevelopments (5 acres and greater)* - Periodic Site inspections of the storm sewer, outlet, restrictors, and detention storage areas may be required by the Township Engineer. Specific items needing inspection prior to the completion of the project will be identified in the storm water management permit (i.e. installation of restrictors, restricting pipes, etc.).

   The Township Engineer shall be informed 24 hours in advance of the placement of items requiring inspection as outlined on the storm water management permit.

   A final inspection of the restrictor and the detention storage areas by the Township Engineer will be required. This one-time inspection will be performed at the completion of the project. Subsequent inspections may be required if deficiencies exist.

   The Contractor and the Developer's Engineer will have to complete a letter of

certification indicating the storm drainage system has been inspected during construction and the drainage system was constructed as shown on the approved storm water management plans (See Appendix B). An occupancy permit will not be issued until the Township has received a letter of certification and the Township Engineer has completed the final inspection of the site. (Amended, 2002)

3. *Platted Developments, Subdivisions, and Condominium/Apartment Projects* **-Full time inspection of storm sewer and drainage system construction will be required**. The Owner/Developer's Engineer or the Township Engineer shall perform this inspection. Daily inspection reports shall be completed for all days on which construction of the storm drainage system occurs. At a minimum, the daily inspection reports shall include the information shown on the sample daily inspection report included in Appendix B. These daily inspection reports do not have to be submitted to the Township. However, they should be on file with the Engineer and made available upon request.

   INSPECTIONS:

   A final inspection by the County Public Works Engineer will be required for the restrictor / outlet device or metering line, storm sewers and the detention storage areas. The Public Works Engineer may also require videotaping of the system or portions of the system before accepting the drainage system as a public utility. The cost of the videotaping is the responsibility of the owner or contractor. Subsequent inspections may be required if deficiencies exist. Any additional fees incurred during this inspection process are the responsibility of the owner or contractor.

   A final inspection of the rear lot drainage system by the Township Engineer will be required. This one-time inspection will be performed at the completion of the project, or when directed by the Township. Subsequent inspections may be required if deficiencies exist. If additional inspection fees are incurred as a result of construction deficiencies these will be passed on to the owner or contractor.

   The Developer's Engineer and Contractor will have to complete a letter of certification indicating the storm drainage system has been constructed as shown on the approved storm water management plans (See Appendix B). An occupancy permit will not be issued until the Township has received a letter of certification and the County Public Works Engineer and the Township Engineer have completed the final inspections of the site. (Amended, 2002)

F. Fee Schedule (Amended, 2002)

The fee schedule for reviewing storm drainage submittals and performing inspection of drainage system construction is determined by the Saginaw Charter Township outlined below:

Type of Review	Fee	Collection of Fees
Small Developments and Redevelopments (0 to 5 Acres)	*TBD by Twp	Fees added to Building Permit fee.
Large Developments and Redevelopments (5+ Acres)	Hourly, minimum fee of $600	Fees added to Building Permit fee.
Subdivision, Condominium, and Platted Developments Rear Lot Reviews	TBD by Twp	$500 deposit collected prior to initiation of the
Determination if a redevelopment project is exempt from compliance	TBD by Twp	Fees added to Building Permit fee.

These permit fees include:

a. Pre-design meeting, if necessary.
b. Initial formal review.
c. Review of requested changes made during first review.
d. First inspection of site upon completion.

An additional fee will be required for subsequent reviews beyond the first formal review and subsequent inspections beyond the first site inspection. The fee will be based on the actual hours needed to complete the subsequent reviews and inspections.

*TBD = to be determined

G. Exemptions (Amended, 2002)

Redevelopment projects will be exempt from the requirements of the storm water management plan provided:

- There is an existing approved storm water management plan and maintenance plan for the site that meets storm water quality requirements as defined in the current NPDES Watershed Permit MIG610000. (Amended November, 2012)
- The area of additional roof, paved, and gravel surfaces is less than 5% of the existing improved areas of the site.
- The additional roof, paved, and gravel surface does not exceed 20,000 sq. ft.
- There is no cumulative increase equal to, or greater than the 5% area of improvement. (If the site has added 2% one year, 3% another year, and another 2% increase in imperviousness.)
- There is no significant impact or change in detention amounts that may have adverse effects on neighboring properties.

Example: Existing 1 acre site with .75 acres of improved property plans to add 3,000 square feet of paved surface to the existing development. .05*(.75*43560) =1633.5 sq. ft.. 3,000 > 1633.5 therefore project will need to follow storm water management plan.

To obtain this exemption, the contractor, developer, or developer's engineer must fill out the REQUEST FOR EXEMPTION **form** in Appendix B. Also, supply a site map with existing conditions (buildings, parking lots, other impervious / pervious surfaces, etc.), current storm water management plan or maintenance plan for the site, and proposed changes (buildings, parking lot, changes in impervious / pervious surfaces, etc.) with supporting calculations necessary for review purposes. These calculations are shown above. If the calculation is not present, the Township Engineer will not review the plan.

NOTE: **If no storm water management plan exists, the site must come in to compliance with Ordinance 583 to the maximum extent practicable.**

An exemption may still be granted to redevelopment projects not meeting the above requirements if approved by the Township Engineer and Saginaw Charter Township.

The Township Engineer can exercise the right to have a site comply with Ordinance 583 even if the change in impervious area is less than 5% if special circumstances exist, such as historical drainage problems affecting the area, or other concerns.

H. Appeals Process

If the developer is in disagreement with any of the reviews or inspections made by the Township and/or Township Engineer, an appeal can be made to the Township Manager within 30 days of the review and/or inspection.

Upon review of the items presented for appeal the Township Manager may:

* Refer to an independent third party for an opinion / recommendation
* Arbitrate with the Developer and Township Engineer to reach an acceptable solution.
* Over ride the Township Engineer.

I. Penalties/ Enforcement

The Township will not award any contracts for the installation of the water or sanitary sewer utilities until such time as the storm water management plan has been approved by the Township Engineer. Additionally, penalties may be utilized in the form of civil

infractions and court action until compliance is achieved with the approved plan.

The following are also examples of infractions or tampering with storm water management systems that can result in penalties or enforcement actions:

Removal of plate restrictors from catch basin inlets
In the Combined Sewer District in both Saginaw Charter Township and the City of Saginaw there is a system of catch basin inlet restrictors. These restrictors were placed in the catch basins as a result of extensive hydrologic and hydraulic studies related to the NPDES program to reduce and eliminate combined sewer overflows into the Saginaw and Tittabawassee Rivers. The intent of these restrictors is to detain storm water runoff in streets, parking lots and allow time for the combined sewer overflow (CSO) basins to react to storm events. The CSO basins and catch basin restrictors have had two effects:

1. Substantially reduced the flow of untreated wastewater into the Saginaw and Tittabawassee Rivers.
2. Significantly reduced the incidence of combined sewer back-ups into the basements of residential homes in the combined sewer areas.

(Amended November, 2012)

Removal of flow restriction devices on sites with approved storm water management structures.
No property owner or other party shall remove or modify a catch basin restrictor or any storm water device designed to restrict flow of storm water into a storm water conveyance system or combined sewer system. The removal or modification of a device to restrict flows of storm water can only be performed if the party responsible for the removal has had a detailed hydrology and hydraulic study done that provides proof of no significant impact on neighboring properties upstream or downstream of the site. The party removing such a restrictor will be held liable for any water damage incurred on neighboring parcels. (Amended November, 2012)

Sites not constructed per the approved storm water management plan.
Upon inspection by the Township Engineer any sites not constructed per the original "Approved" storm water management plan must be brought into compliance within 30 days of notice by letter from the Township of the deficiencies. (Amended November, 2012)

Storm Water Quality
All sites with storm water management plans must make efforts to assure that storm water leaving their sites and entering into a municipally separated storm sewer system (MS4) is as clean as possible and free of any polluting materials or substances. Developments/property owners must be responsible with our water resources and realize that storm drainage system discharge into the Saginaw or Tittabawassee Rivers and ultimately Saginaw Bay and our Great Lakes must be kept as clean as possible. Developments and property owners must take responsibility to keep our rivers and lakes clean by discharging only clean storm water.

Any best management practices designed for a site must be maintained properly to assure it provides for the discharge of clean storm water. Any tampering with best management

practices must be corrected immediately when notified of any violations by Township staff, Township engineer or other regulatory agencies such as the county's public health department or the Michigan Department of Environmental Quality. (Amended November, 2012)

III. DESIGN CALCULATIONS

A. Allowable Discharge Rate (Qa) and 10 Year Design Discharge (Qd_{10})

The storm water discharge rate from any proposed development or redevelopment site shall be restricted to an allowable discharge (**Qa**). This allowable discharge shall be the most restrictive discharge (smallest discharge) from the site as determined by one of the following three (3) design approaches. The 10 year design discharge (**Qd_{10}**) for the proposed site development or redevelopment to be used for storm sewer sizing and detention /retention sizing shall include the discharge from all development upstream of the proposed site fully developed to current zoning requirements.

1. Rational Method using predetermined Impervious Factors (**IF**) and actual percent imperviousness (**IMP**).

   The allowable discharge rate and 10 Year design discharge for a site is calculated using the Rational Method.

   Q = (C)(I)(A)

   Q is the runoff rate in cubic feet per second (cfs).
   C is the coefficient of runoff.
   I is the intensity of rainfall in inches per hour (in/hr).
   A is the area of the site in acres (ac).

   The rational method will be used to calculate allowable discharge **(Qa)** and 10-year design discharge **(Qd_{10})**. The allowable discharge (**Qa**) is calculated using the impervious factor **(IF)** for the site. The **IF** for the proposed site development or redevelopment can be obtained from the Township Engineer or from within this document.

   The 10-year design discharge (**Qd_{10}**) is calculated using the actual percentage of imperviousness **(IMP)** for the **entire drainage district** when fully developed to the zoned land usage. The **IMP** for the Township's zoned land uses can be obtained from the Township Engineer or from within this document. The actual proposed and/or existing amount of impervious surface shall be used when **designing the storm sewer system**. The minimum **IMP** shall not be less than the values defined in Table II, of this document. If an **IMP** lower than the minimum values is used, the basis for determining the proposed and/or existing amount of impervious surface shall be submitted with calculations.

All of the contributing area to the site shall be considered when determining the 10 Year design discharge (**Qd_{10}**), including any existing offsite drainage coming onto the site. Sizing the proposed drainage system based on the entire contributing drainage area will minimizes potential impacts to upstream property owners.

The actual area of the site development, excluding runoff from surrounding lands, shall be used when determining the allowable discharge from the site **(Qa)**. Using only the runoff from within the proposed site development to determine the allowable discharge minimizes impacts to the existing downstream outlet.

The allowable discharge or 10 year design discharge will be determined by summing the calculated runoff from impervious surfaces and pervious surfaces based on the required **IF**. **Qi** is the runoff rate from the impervious surfaces of a site and **Qp** is the runoff rate from the pervious surfaces of a site. The total runoff rate for a site is the sum of **Qi** and **Qp**.

$$Q = Qi + Qp = (Ci)(Ai)(I) + (Cp)(Ap)(I)$$

$$Qa = (Ci)(I)[(IF)/100](A) + (Cp)(I)[(100-IF)/100](A)$$

$$Qd = (Ci)(I)[(IMP)/100](A) + (Cp)(I)[(100-IMP)/100](A)$$

To calculate **Qa** or **Qd** the values for **Ci**, **Cp**, **I**, **IMP**, **IF**, and **A** must be determined. The percent impervious (**IMP**) are obtained from the Township, Township Engineer, from within this document, or measured from the site plan. The impervious factor (**IF**) is a design value obtained from the Township Engineer or from within this document. The IF is not to be confused with a site's impervious area. The Area (**A**) is determined based on measurements of the entire area contributing to the storm sewer or detention area. The impervious area runoff coefficient **(Ci),** the pervious area runoff coefficient **(Cp),** and the rainfall intensity (**I**) are calculated values based on the time of concentration **(t_c)**.

Time of concentration (**t_c**) is the time it will take for runoff from the most hydraulically distance point (i.e. high elevation) to reach the design point (i.e. low elevation such as a catch basin or an outlet sewer). The following can be used to calculate time of concentration:

t_c (min) = [length (ft) of runoff / (avg. vel. (fps) * 60 (sec/min))] + lag time (min)

The average velocity for overland drainage in Saginaw Charter Township should be assumed at 1.0 fps without detailed calculations, based on overland slope and land use. Lag time will range between 15 minutes and 20 minutes. When calculating time of concentration (**t_c**), include all assumptions with calculations.

When the time of concentration (**t_c**) is found to be greater 30 minutes, calculate the runoff coefficients (**Ci, Cp**) and rainfall intensities (**I**) according to the following

equations:

impervious area (Ci) = 0.70
pervious area (Cp)= 0.10

$$I_{10} = 175 / (25 + t_c)$$

When the time of concentration (**t_c**) is found to be less than 30 minutes, calculate the runoff coefficients (**Ci, Cp**) and rainfall intensities (**I**) according to the following equations. If **t_c** is calculated to be less than 15 minutes, use **t_c** equal to 15 minutes.

$$\text{impervious area (Ci)} = t_c / (8 + t_c)$$
$$\text{pervious area (Cp)} = t_c / (80 + 4\, t_c)$$

$$I = 136 / (20 + t_c)$$

NOTE: for 100 yr (1% recurrence interval) design storms use:

$$I_{100} = 275 / (25 + t_c)$$

2. The allowable discharge may need to be restricted further based on the capacity of the downstream storm sewer or drainage system. To minimize impacts downstream, the maximum capacity of the existing storm sewer or drain without surcharging or flooding shall be determined at the controlling downstream restriction. The drainage area contributing at this restriction shall be determined. Based on the area of the proposed development, the area upstream of the restriction, and the outlet capacity at the restriction, an allowable discharge shall be determined by the following method.

   Qa = Qr(Ad/Ac)

   Qa = Allowable discharge from proposed development or redevelopment.
   Qr =Maximum capacity of downstream storm sewer/drain at the controlling restriction.
   Ad = Area of the proposed site development or redevelopment.
   Ac = Total area of watershed contributing upstream of the restriction.

3. If it is determined the existing runoff from the drainage district is at or exceeding the capacity of the downstream storm sewer or drain, the proposed development or redevelopment will, at a minimum, have to be restricted to existing conditions. The allowable discharge from the site shall not exceed the runoff from the site during the 10 year storm event under existing conditions or the outlet drain shall be improved. This discharge can be determined using the rational method previously identified and the existing percentage of impervious surface on the site.

B. Storm Water Detention Requirements

The storm water detention storage required for a site is calculated as follows:

Calculate the maximum flow rate per acre of impervious surfaces, **Qo**.

$$Qo = Qa / (Cw*A)$$

Qa= Actual Restricted Discharge (As determined by actual proposed restrictor or metering line)
A = Area of the site in acres.
Cw = Weighted Coefficient for runoff for the proposed development.

Calculate the storage time **(T)** in minutes at which the maximum volume of storage will occur on site for the 10-year design storm.

$$T_{10} = (4080/Qo)^{1/2} - 20$$

NOTE: for 100yr (1% recurrence interval) design storm use:

$$T_{100} = (10{,}312.5/ Qo)^{1/2} - 25$$

Calculate the maximum volume of storage per acre of impervious surface, **Vs**. The units of **Vs** are cubic feet per acre of impervious surface (cu. ft / ac).

$$Vs = [(8160)(T) / (T + 20)] - (40)(Qo)(T)$$

NOTE: for 100yr (1% recurrence interval) design storm use:

$$Vs_{100} = [(16{,}500)(T) / (T + 25)] - (40)(Qo)(T)$$

Finally, calculate the **total volume of storage required** for the site, **Vt**. The units of **Vt** are cubic feet.

$$Vt = (Vs)(ACw)$$

NOTE: for 100yr (1% recurrence interval) design storm use:

$$Vt_{100} = (Vs_{100})(ACw)$$

C. Discharge Restrictor Requirements

Restrictors are required to regulate the discharge of storm water to or below the allowable discharge rate established for a site. These restrictors may be an inline restrictor or a smaller outlet pipe that will act as a metering line.

The **circular in-line restrictor** is sized based on the orifice formula:

$$A = Qa/[\ 0.62\ (64.4(dh))^{0.5}\ ]$$

A = area of orifice (sq. ft.).

dh = head differential from center of orifice to Hydraulic Grade Line of detention pond at maximum capacity (ft).

The **metering line** is sized based on Manning's formula:

$$Qa = 1.49/n\ AR^{2/3}S^{1/2}$$

n=Manning's roughness coefficient
A=area of the pipe (sq. ft.)
R=hydraulic radius (ft.)
S=hydraulic grade line slope (ft./ft.)

The slope of the hydraulic grade line is determined by the top of storage elevation to the top of the outlet of the metering line, divided by the length of the metering line.

$$\textbf{Slope} = \frac{\textbf{Elevation (top of storage) – Elevation (top of metering line at outlet)}}{\textbf{Length of metering line}}$$

D. Determination of First Flush volume & release time (Added November, 2012)

First Flush requirements

All construction projects are required to detain the first flush volume, which is defined as 0.5 inch of runoff over the entire parcel being developed or re-developed. This volume will be calculated as:

$$1815 \times A \times Cw = \text{FF volume}$$

This volume must be held for more than 12 hours but not more than 16 hours. The average allowable release rate for runoff resulting from 0.5" of rain in 24 hours is calculated as follows:

$$Q_{ff} = \frac{\text{Volume}}{(24\text{hr}) * \left(3600\text{sec}/1\text{hour}\right)} = \frac{V}{86{,}400\text{sec}}$$

Determine Area of Orifice

The first flush discharge controls the required total area of orifice (number of holes needed).

$$A_{ff} = \frac{Q_{ff}}{(0.62) * \sqrt{2gh_{ave}}}$$

Where h_{ave} is defined as, h_{ave} = (2/3) x (elev.$_{\text{first flush}}$ – elev.$_{\text{bottom}}$)

The number of holes needed is calculated as follows:

$$\text{Number of holes} = \frac{A_{ff}}{\text{Area of orifice}}$$

Detention Time for Given Orifice Area (Calculated above)

$$Q_{ff\ New} = A_{ff\ New} * 0.62 * \sqrt{2gh_{ave}}$$

New Holding Time ($T_{ff\ New}$)

$$T_{ff\ New} = \frac{V_{ff}}{Q_{ff\ New}}$$

The new holding time must be within the time frame listed above (12 to 16 hours).

Bank Full Flood requirements (Discuss with Township Engineer if site needs this requirement)

All construction projects are required to detain the bank full (BF) volume, which is defined as the 24 hour, 2-year storm event (2.14 inches). This volume will be calculated as:

$$V_{bf} = (2.14") * \left(\frac{1'}{12"}\right) * \left(\frac{43560\, ft^2}{1ac}\right) * (Area) * C_W$$

Or

7768 x A x Cw = BF volume

This volume must be held for more than 24 hours but not more than 36 hours. The average allowable release rate for this rain event is calculated as follows:

Determine Area of Orifice

Check the discharge through the first flush orifice to see if additional holes are necessary.

h_{ave} = (2/3) x (elev.$_{\text{bank full}}$ – elev.$_{\text{bottom}}$)

$$Q = A_{bf} * (\#orifices) * 0.62 * \sqrt{2gh_{ave}}$$

$$T_{bf} = \frac{V_{bf}}{Q}$$

If T_{bf} is greater than 36 hours, more orifice area will be needed.

Choose a target detention time (T_{total}) to find the remaining volume which needs to be released so that detention time is between 36 to 48 hours.

$$V_{rem} = V_{bf} - V_{ff}$$

$$T_{rem} = T_{total} - T_{ff\ New}$$

Find Q_1, which is defined as the discharge through the First Flush orifice when both the FF and the bank full volumes are contributing.

$$Q_1 = A_{ff} * (\#orifices) * \sqrt{2gh_{ave}}$$

$$V_1 = T_{rem} * Q_1$$

Leftover volume will be released by the Bank Full orifice. V_2 will be defined as the amount of water to be discharged

$$V_2 = V_{rem} - V_1$$

$$Q_2 = \frac{V_2}{T_{rem}}$$

$$A_2 = \frac{Q_2}{0.62 * \sqrt{2gh_{ave,bf}}}$$

The number of holes needed is calculated as follows:

Number of holes = (A_{ff} / Area of Orifice)

IV. DESIGN STANDARDS

A. Requirements

1. General Requirements

   a. Storm water detention requirements for any new construction development, redevelopment, or land use change occurring within Saginaw Charter Township will be determined according to this storm water management plan.

   b. For business and commercial site developments it is recommended that a licensed landscape architect be utilized early in the design process. The landscape architect should be knowledgeable in addressing issues related to water quality and incorporate designs that would effectively utilize space. The guidelines of this storm water management plan regarding storage and discharge must still be met. But the use of native or similar plants and innovative designs such as rain gardens, bio-detention areas or swales to address water quality should be used whenever possible. (amended 3-19-03)

   c. The peak runoff rate during a 10-year storm event from a developed or improved site shall not exceed the allowable discharge rate **(Qa).** This rate is determined as outlined in the design calculation section of this plan. It should be noted that if downstream conditions do not permit a site to discharge the calculated Qa, then the site is only allowed its share of the storm drainage system based on contributing area of the system. **For example**, if a site is discharging into an undersized storm sewer system and its allowable discharge rate is greater than or more than its fair share of the outlet capacity the site can only discharge at the rate that will not cause drainage problems. (Amended November, 2012)

   d. There shall be no detrimental effect on the floodway or the floodplain elevation during a 10-year design storm upstream or downstream of the proposed development area as a result of the proposed development.

   e. Engineering calculations must be submitted with the storm water discharge permit application. The calculations shall follow the procedures outlined in this document.

   f. Roof drains may be connected to a storm sewer system if the flow through the outlet to the storm drainage system is properly restricted. For water quality reasons it is preferable to have the water flow through vegetation before reaching a catch basin for discharge. Unrestricted runoff from roof drains directly to a public drain or private unrestricted drain will not be acceptable. There are no exemptions.
      In Combined Sewer areas (south of Weiss Street and East of Center Road) roof drains will flow overland first before entering the storm sewer system. Roof drains must NOT connect to structures beyond the properly restricted outlet. Roof drains can be connected to underground cisterns for storage and use in watering landscape and lawns, this volume will be subtracted from the overall detention volume.

g. The Developer, Township Engineer and/or Saginaw County Public Works Commissioner shall make a determination as to whether any or all of the facilities proposed are to become private or part of the Saginaw County drainage system, Saginaw County Road Commission drainage system, or the Michigan Department of Transportation drainage system.

h. The Township Engineer shall, in the case of a proposed subdivision, make a determination as to those control elevations that shall be entered on the final plat or make a determination as to the necessity for deed restrictions on any particular lot in said subdivision requiring the preservation of mandatory drainage facilities. Where a non-subdivided parcel of land is proposed for development, the Township Engineer and/or the Saginaw County Public Works Commissioner shall make a determination as to the need for covenants to maintain responsibility for mandatory drainage facilities. All the said facilities shall be located in easements dedicated to the public, and shall be subject to continual inspection during the construction period.

i. Proposed storm sewer enclosures must be designed so they will not adversely impact any adjacent properties, upstream or downstream, and must be designed to the impervious factors of the lands based upon zoning, not necessarily existing conditions.

j. Soil erosion and sedimentation control measures, including Best Management Practices (BMPs), must be implemented and properly maintained during and after construction. It is highly recommended that silt sacks or similar types of inserts be used in catch basin inlets. It is not recommended to use filter fabric under the catch basin inlet rims. (Amended November, 2012)

k. The owners or lessees of the property or business shall be advised to annually clean out the sumps of all catch basins or manholes and routinely check restricted outlets for obstructions (see example maintenance plans in Appendix F). Also, maintain detention basins by mowing. (Amended, 2002)

l. It is recommended that BMPs addressing water quality for stormwater be instituted on all storm sewer systems, see Appendix E for examples. Additional examples can be found in MDEQs "Guidebook of Best Management Practices for Michigan Watersheds", available from MDEQ web site at:
http://michigan.gov/deq/0,1607,7-135-3313_3682_3714-118554--,00.html
Or the Low Impact Design Manual for Michigan which can be found at:
http://www.semcog.org/LowImpactDevelopment.aspx
(Amended November, 2012)

2. Storm Sewer Piping Requirements

a. Proposed storm sewer shall be designed to have capacity to pass 10-year design storm runoff rate **(Qd).** Refer to Design Calculations section of this document.

b. Class III or IV concrete pipe, or other suitable material approved by the Saginaw County Public Works Commissioner or the Saginaw County Road Commission, must be used for the following:

* Combined Sewers (combined sewers must have premium joints)
* Storm Sewers within county and state road right-of-way.

c. Provide 2' minimum cover with minimum 5' cover in M.D.O.T. R.O.W.

d. Provide 18" vertical separation between all other utilities, including sanitary sewers and water mains. Provide 10' horizontal separation from other utilities. Any deviations from these vertical and horizontal separations must be discussed with and approved by the Township Engineer. (Amended, 2002)

e. A minimum of 4 inches of sand bedding is required beneath the pipe and a minimum of 6 inches of sand backfill is required above the pipe.

f. Manhole/catch basin shall be placed at a maximum distance of 300' from any other manhole/catchbasin for access/maintenance purposes.

g. Provide a sump discharge outlet for each individual property/lot in all developments. Sump leads should not be connected to rear lot drainage systems unless they are properly sized and there is a backflow prevention valve on the sump pump.

   a. EXCEPTION: If sump leads are connected to rear lot basins, see #4C for design criteria.

h. Place a catch basin (minimum 3' diameter) between each pair of driveways, if curb and gutter, driveway culverts, and/or valley shaped ditches are not proposed.

i. When appropriate the catchbasins should have leads strategically placed

j. Minimum pipe grades must be such to produce minimum scouring velocity of 2.5 ft/sec when pipe is flowing full without surcharging. This requirement may be waved if the Nyloplast systems or similar are used and if the storm system outlets into a detention basin with adequate resident time to remove sediment. (Revised November, 2012)

k. Concrete pipe (C-76-III, IV) shall have fabric wrapped joints.

l. For private storm sewer systems, plastic pipe may be used. This plastic pipe shall be either smooth walled HDPE or SDR 35 PVC Pipe. If pipe is perforated, a manufacturer's sock shall be used over the pipe.

m. Minimum pipe diameter for catch basin leads is 10". The material should be PVC.

n. Minimum pipe size for storm sewer main is 12".

o. When two or more pipes of different sizes come into a structure, the 8/10th flow lines shall match when possible.

p. Catch basins should have a minimum sump depth of 18".

q. Inlets may be allowed if approved by the Township Engineer and adequate sediment trapping measures are provided.

r. Catch basin inlets must be permanently marked for outfall destination or cast in the metal of the inlet (e.g. EJIW 4000 series curb inlets), with the message **"Dump No Waste" "Drains to River"** or similar message. All new construction and reconstruction must have inlet grates with these markings.

3. Detention/Retention Requirements

a. Residential developments will need to provide a separate lot or parcel for detention or retention. In addition the following requirements will apply:

i. This area cannot be dedicated through an easement that covers more than one parcel.

ii. This individual lot or parcel must abut a public road with a twenty (20') minimum width and should be near the outlet.

iii. Maintenance easements should be shown on the plans (see section D)

iv. The outer limits shall be delineated on the Exhibit B drawings of a Condominium Development and Final Plat.

v. **Setbacks** will be such that the minimum distance to adjacent lots side property line is 10 feet.

(a) Condominium Developments - Detention or Retention areas shall be designated as general common areas.

(b) Platted Developments - Detention or Retention areas shall be designated as a storm water detention/retention area or recreation area when approved by the Township Engineer. (See State Requirements).

b. Requirements for all Detention/ Retention Areas

i. Proposed storm water detention or retention facilities shall be designed to detain/retain the 10-year design storm runoff volume and first flush volume from the entire contributing area in excess of the allowable discharge from the site (See Design Calculations, Section III).

ii. The maximum design storage elevation in a detention area must be a

minimum of one (1) foot below the lowest ground elevation adjacent to the detention/retention area.

iii. Parking Lots - the design maximum storage elevation in a detention area must not exceed a depth of nine (9) inches above any paved surfaced in non-residential developments. NOTE: If parking lot detention is being used the site owner MUST make sure this information is passed along to new owners or lessee's of the site. (Amended November, 2012)

iv. In residential developments the maximum ponding elevation in the detention/retention pond shall not exceed the lowest rim elevation in the development.

v. The design maximum storage elevation in a detention or retention area must not be closer than one (1) foot below the lowest opening, window, or door of the proposed structure(s) or existing facilities.

vi. An emergency overflow shall be provided at the detention/retention basin to insure the maximum ponding elevation does not exceed the depths outlined in items iii and iv above. This overflow shall be able to allow drainage from the site in the event the 10 year storm is exceeded or the restricted outlet is obstructed. This overflow should be directed to a public street or area with no undesirable impact. If no acceptable emergency overflow exists for a site, the site may be required to store the volume of a 100 year storm (Amended, 2002)

vii. Design Engineers, Architects and/or developers must indicate if there is a potential for a site to contaminate storm water runoff in the review process. They must show how this potential contamination will be prevented. The owner will be responsible for any contamination of storm water runoff leaving the site. Depending on the situation the site may be reported to the County Health Department or the Michigan Department of Environmental Quality if the contamination affects human health or environmental safety. (Amended November, 2012)

viii. Designs of detention/retention facilities shall incorporate safety features, particularly at inlets, outlets, on steep slopes, (3H:1V or steeper) and at any attractive nuisances. These features may include, but not be limited to, fencing, handrails, lighting, steps, grills, signs, landscaping and other protective or warning devices so as to restrict access as required by the Township Engineer.

ix. Side slopes and the bottom of detention/retention basins shall have topsoil to a minimum of 3 inches, and seeded.

x. The side slopes and bottom of the basins shall be shaped with maximum slopes no steeper than 1 vertical to 4 horizontal to allow mowing of these surfaces. It is recommended that side slopes ranging from 5H to 10H to 1V be used. Detention basins must not appear to be a "ditch". Other design and landscaping features may be needed to provide for protection of the public (e.g. fences, hedgerows, etc.). (Amended November, 2012)

xi. Detention/retention basins with bottom slopes less than 1.5% shall be underdrained. If a detention basin is designed to be a “dry” basin, the owner must make corrections if it is not draining properly. No concrete low flow channels can be constructed on the bottom of the basin. No French drains can be used if there is no outlet for this type of drain. (Amended November, 2012)

xii. Standpipes with gravel filters must be incorporated into the bank of the detention basin in such a manner as to be aesthetically pleasing and incorporate landscaping to “blend” it into the site design. (Amended November, 2012) See Details in Appendix.

xii. Typical setbacks for detention areas are as follows: 30 foot setback from front and rear property lines, 10 foot setback from side property lines. However, if there is a question of maintenance accessibility and the adjacent property does not have a 10 foot easement, a minimum of 20 feet must be provided. (Amended, 2002)

xiii. Detention/retention basins shall be constructed with the top of banks a minimum of 5 feet from any pedestrian walkway (i.e. public and private sidewalks/ bike paths).

xiv. If a detention/retention basin is proposed in a front yard area it must be designed to be aesthetically compatible with the development. (i.e. mild slopes of 6V:1H, etc.). The owner or purchaser of this parcel must be notified of the storage area.

xv. Incorporate BMPs addressing water quality issues, such as forebays, grass swales, vegetated strips, etc. (Amended, 2002)

xvi. In dry detention areas inlets and outlets shall be constructed close to each other to decrease the probability of standing water if there are space constraints. It is best for water quality for distance between the inlet and outlet to help filter water in vegetation, however, it is required that if there is more than 20 feet between the inlet and outlet that the slope be a minimum 2% to minimize wet spots.

xvii. Detention basins are recommended to be designed as dry basins with mowable vegetation. If the water table creates a situation where wetland plants are growing and the site is not mowable, the site must be corrected in a manner agreeable to the township engineer. The growth of cattails and phragmites must not occur in the basins. (Amended November 2012)

xviii. If a detention basin is designed to be a “wet” basin the depth of the water must be at least 2.5 feet to discourage growth of cattails and phragmites. BMPs must be in place to assure water quality and prevent algae growth, for example a fountain or some type of aeration system. (Amended November, 2012)

xix. Sump leads cannot discharge directly into a detention basin. (Amended November, 2012.

xx. No domestic animals will have long term access into a detention basin. For example; no dog kennels or pets can use this feature for waste disposal, no corrals or fencing to keep domestic animals in proximity to a detention basin in a manner that animal feces can come into contact with storm water that will eventually reach our surface water resources. (Amended November, 2012)

c. Maintenance Requirements for Detention/Retention Facilities (see Appendix F)

These systems are NOT owned or operated by Saginaw Charter Township, therefore, detention/retention basins are not maintained by the Township. These systems are owned by the property owner, commercial business, homeowners associations or condo association and are their responsibility to maintain.

i. Detention/retention basins and restrictors will be maintained as a mowable surface if they are a dry basin. If a detention/retention basin is found not to be maintained or a restrictor is removed or not maintained the owner will have 30 days to complete the necessary maintenance. If this maintenance is not completed, the Township will take the necessary legal action to have the work completed.

ii. Condominium Projects - If the detention/retention facility areas are designated as general common element, the Master Deed will set up a mechanism by which the ponds will be maintained by the Condominium Association.

iii. Platted Developments - An association for the subdivision will need to be established. The Saginaw County Public Works Commissioner will require an easement be established that will enable their office to repair any problems associated with the system and assess the charges back to the subdivision association members. This will only occur if the association does not properly maintain the detention/retention area.

iv. Maintenance shall include: mowing of the basin bottom and side slopes, removal of excess spoils from the basin, removal of debris and sediment from the outlet structure, replacement of stone/rock filter systems at outlets when plugged with sediment repair of fencing, spraying for plants, brush, and cattails, and any other maintenance necessary to insure the basin remains functional and is aesthetically pleasing to surrounding landowners.

v. At no time shall a property owner create a situation in a stormwater detention area where a known pollutant can contact and contaminate storm water. **Design Engineers and Architects must indicate any potential for a site to contaminate storm water during the review process.** (Amended November, 2012)

4. Rear Lot Drainage Requirements

These systems are NOT owned or operated by Saginaw Charter Township, therefore, rear lot systems are not maintained by the Township. These systems are owned by the property owner, commercial business, homeowners associations or condo association and are their responsibility to maintain.

a. All lots within a condominium or platted development shall require rear lot drainage. Each lot shall be adjacent to a rear lot catch basin.

b. Minimum rear lot tile drain sizes and slopes have been determined assuming ponding will occur in rear yards for a duration 4 times the duration of a given 10 year design storm event. This time may range from 4 to 24 hours depending on drainage conditions. The following minimum pipe sizes and slopes apply:

   i. Rear lot tile drains with contributing drainage areas up to 2 acres will have a minimum diameter of 6 inches and a minimum slope of 0.5 %.

   ii. Rear lot tile drains with contributing drainage areas greater than 2 and less than 3 acres shall have a minimum diameter of 8 inches and a minimum slope of 0.4%.

   iii. Rear lot tile drains with contributing drainage areas greater than 3 and less than 4 acres shall have a minimum diameter of 10 inches and a minimum slope of 0.32%.

   iv. Rear lot tile drains with a contributing area greater than 4 acres shall be considered main line storm sewer and shall be designed according to corresponding storm sewer requirements (See design calculations section of this report). Calculations shall be submitted to verify that rear lot drains have the capacity to pass the 10 year design storm event. Plastic pipe is acceptable for rear lot drainage systems draining more than 4 acres provided it is installed in landscaped/ lawn areas.

   v. Rear lot tile drains cannot connect to road underdrains.

c. If a rear lot drainage system is to be used as an outlet for storm sewer services (i.e. sump leads), the following restrictions will apply for construction of the rear lot drainage system:

   i. Homeowners cannot discharge grey water from clothes washing machines or sinks into the sump area for discharge by the sump pump. This is a violation of plumbing codes and building regulations in the Township.

   ii. The rear lot drainage system must be directly connected to the development's storm sewer system with a catch basin. Storm sewer services cannot be connected to a branch of a rear drainage system.

   iii. Connections at the rear yard basin and at the storm sewer shall be soil tight and constructed using premanufactured seals, joints, etc. (i.e. Kor-n-Seal).

d. Sand backfill and bedding is not required for rear lot drainage systems provided dual wall pipe is used (i.e. N-12, H-1-Q, etc.) or SDR-35 PVC pipe.

e. Rear lot drainage tiles shall have a minimum cover of 2'. A minimum of 4 inches of sand bedding is required beneath corrugated plastic pipe and a minimum of 6 inches of sand backfill is required above corrugated plastic pipe.

f. Rear lot catch basins shall have a minimum diameter of 2 feet. Plastic premanufactured structures may be used for rear lot drainage systems. Concrete structures are required for storm sewer systems. The catch basins shall not be placed at spacing greater than 300 feet. Any bends, turns, or dead ends shall require a structure. Inlet grates must have "Dump No Waste" "Drains to River" or equivalent in the casting or permanently marked.

g. If pipe is perforated, a manufacturer's "sock" shall be used over the pipe.

h. A 10' wide easement shall be provided on every lot for all rear lot drainage systems. Said easements shall be written as to permit neighboring property and/or condominium owners to maintain the rear lot drainage system as it may effect their property. This is to assure a minimum of 20' of easement for maintenance purposes. NOTE: if no rear lot system exists on the property this easement should still be provided in case of future drainage problems.

i. Existing rear lot drainage systems abutting a proposed development may be used for the new development provided:
   i. The existing rear lot drainage system has the capacity to convey storm water runoff from the proposed rear lot drainage areas.

   ii. A signed agreement is obtained from property owners located within the existing subdivision allowing the proposed subdivision's rear lot storm water runoff to pass through their existing system.

j. Phased developments owned by the same proprietor may utilize proposed rear lot drainage for a current development phase on future phases of the development provided:

   i. Covenants shall be recorded into the deeds of the property owners affected in the current phase allowing for future phases of the development to drain into the current phase's rear lot drainage system.

   ii. If covenants are not made as outlined above, future phases will require separate rear lot drainage systems or agreements from the current land owners allowing for the use of their rear lot drainage system.

   iii. The rear lot drainage system shall be designed to convey rear lot drainage from both the existing and proposed rear lot drainage areas.

iv. Easements shall be provided, allowing for maintenance by both abutting landowners in current and proposed phases of development.

k. Rear lot drainage must be shown on the preliminary plat (subdivisions) or site plan (condominiums).

m. All rear lot drains will connect to an approved storm water drainage system.

n. Rear lot drainage systems in platted developments are the responsibility of the individual homeowners and the homeowner's association. An easement is present to provide for maintenance work on rear lot drainage systems. The property must be returned to its pre-maintenance conditions after repairs or maintenance has been performed. The homeowners association should develop a preventive maintenance plan for the rear lot system to assure proper (see Appendix F for a sample) function of the system. If necessary, the homeowner may repair the rear lot system on their own if they so desire. However, the area worked on must be returned to the condition it was in prior to the repair. (Amended, 2002).

o. Rear Lot layout examples can be found in Appendix G.

p. If a development causes drainage problem on existing neighboring parcels because of grade changes interrupting historical flow patterns, the Township or the Township Engineer may require the development's rear lot system to provide a drainage outlet for the affected site. (November, 2012)

5. Rain Gardens & Infiltration Drainage Requirements

These systems are NOT owned or operated by Saginaw Charter Township, therefore, infiltration systems are not maintained by the Township. These systems are owned by the property owner, commercial business, homeowners associations or condo association and are their responsibility to maintain.

a. When infiltration technology is used it is recommended that the Low Impact Development Manual for Michigan be used in the development of the design. This manual can be obtained at: http://www.semcog.org/LowImpactDevelopment.aspx

b. The storm water feature must be maintained in functioning condition for the life of the BMP.

c. A maintenance plan must be developed for this feature and it must be approved and provided to the owner or lessee of the property to assure proper maintenance.

d. If stone or sand filtration systems are used in a BMP a provision must be made for replacement of filtering media after a specific time frame to assure proper function.

e. Rain gardens must not be used for winter storage areas for snow piles.

B. General Compliance Guidelines

The following guidelines for surface slopes are recommended, but are not a requirement of this plan. These guidelines are provided for reference.

1. The **minimum** surface slopes for overland drainage are as follows:

   * For bituminous paved surfaces, 1%.
   * For concrete paved surfaces, 0.5%.
   * For concrete curb and gutter, 0.32%.
   * For drainage swales and valley shaped ditches, 0.5%.
   * For rear lot drainage swales and valley shaped ditches, 0.5%.
   * Landscape grading, 2%.
   * Detention basin bottoms, 1.5%, unless underdrained.

2. The **maximum** surface slopes for overland drainage are as follows:

   * For bituminous, concrete paved surfaces, 5%.
   * For concrete curb and gutter, 5%.
   * For drainage swales and valley shaped ditches, 5%.
   * For rear lot drainage swales and valley shaped ditches, 5%.
   * Drainage swales and valley shaped ditches shall have maximum side slopes of 4 horizontal to 1 vertical.
   * Landscape grading, 4 horizontal to 1 vertical.

C. Variances from Requirements

The Township may issue a storm water discharge permit that waives allowable discharge requirements and or detention/retention requirements. Variation from these requirements shall be made by filing an appeal with the Township Manager who will require the approval of Saginaw Charter Township whose actions shall be conditioned upon the following:

1. A petition shall be submitted describing in detail the rationale for the proposed design changes including hydraulic and or hydrologic computations.

2. Special circumstances or conditions exist which will affect the property under consideration such that strict compliance with the provisions of the storm water discharge permit would deprive the applicant of the reasonable use of their land.

3. A variance is necessary for the preservation and enjoyment of a substantial property right of the proprietor.

4. Granting of the variance will not be detrimental to the public health, safety or welfare, or injurious to other property in the territory in which said property is located.

6. An affirmative recommendation must be received from the Township Engineer supporting such variance. In the event the Township Engineer does not submit an affirmative recommendation, a recommendation shall be received from Saginaw Charter Township.

D. Easements

1. Wording relative to easement information will be as specifically required by the Saginaw County Public Works Commissioner's office. If a county drain is to be established under the Michigan Drain Code, related easement language will be depicted on final mylar plats and condominium exhibit B drawings as follows:
2. "_____ foot wide private easement to Saginaw County Public Works Commissioner and the _____ Homeowner's (or Condominium) Association for drainage."
3. The typical easement language will be included in the subdivision deed restrictions or condominium master deed.
4. The location and purpose of drainage easements should be clearly described in subdivision deed restrictions or condominium master deeds.
5. Language will be included within the subdivision deed restriction or condominium master deed that clearly notifies property owners of the presence of storm water management facilities and accompanying easements, as well as restrictions on use or modification of these areas.
6. If a utility is to be located within the right-of-way of any county drain or drainage easement, it will be located such that it will not increase the expense of maintaining the drainage facility.
7. Retention/detention basins or other storm water management facilities will have sufficient easements for maintenance purposes. Easements will be sized and located to accommodate access for repairs, operation of equipment, spoils deposition, and other activities identified in the development's storm water system maintenance plan.
8. Easement widths will be determined by the County Public Works Commissioner and be situated in such as way as to allow maximum maintenance access, for example, offsetting them from the centerline. In general, easement widths will conform to the following:
9. Open channels and watercourses: A minimum of 50 feet total width. Additional width may be required in some cases, including, but not limited to: watercourses with floodplains delineated by FEMA; sandy soils, steep slopes, at access points from road crossings.
10. Open swales (cross lot drainage): minimum of 30 feet total width.
11. Enclosed storm drains: A minimum of 20 feet will be required, situated in such a way as to allow maximum maintenance access. Additional width will be required in some cases. These may include, but are not limited to, pipe depths exceeding 4 feet from the top of pipe, sandy soils, and steep slopes.
12. Drain fields (septic areas) shall not be located within drainage easements.

E. Storm Water Management System Maintenance Plans

These storm water collection systems are NOT owned or operated by Saginaw Charter Township, therefore, are not maintained by the Township. These storm water collection systems are owned by the property owner, commercial business, homeowners associations or condo association and are their responsibility to maintain.

1. Maintenance plans will be submitted with all construction plans and will be included in the subdivision agreement or master deed documents of all commercial businesses, subdivisions and site condominiums. All property owners, homeowners associations and condo associations are responsible for maintenance of stormwater structures and facilities on their property or common areas. This includes; catch basins, inlet / outlet structures, storm water conveyance systems, detention basins (dry or wet), underground detention systems, restrictors and other best management practices, such as rain gardens, infiltration systems, and bioswales. These maintenance plans shall include the following information (Amended November, 2012):

    a. An annual maintenance budget itemized by task for subdivisions and site condominiums. Commercial businesses do not need to develop a budget but are responsible for costs of maintenance. (Amended November, 2012)

    b. A copy of the final approved drainage plan for the development that delineates the facilities and all easements, maintenance access, and buffer areas.

    c. A listing of appropriate tasks defined for each component of the system described, a schedule for their implementation and who is responsible for completion of these tasks. The following areas will be covered:

        i. Maintenance of structures such as pipes, channels, outflow control structures, infiltration devices, and other structures.

        ii. Debris removal from catch basins, channels, and basins.

        iii. Dredging operations for both channels and basins to remove sediment accumulation. Storm water system maintenance plans shall require that sediment be removed when sediment reaches a depth of equal to 50% of the depth of the forebay or detention basin or 12 inches, whichever is less.

        iv. Debris and sediment removal from underground storage systems.

        v. Maintenance requirements for bio-swales, infiltration systems and rain gardens: how to annually maintain systems, how to keep infiltration capacity enhanced over time, making sure rain gardens are not in highly traveled areas to cause soil compaction. (Added November, 2012)

        vi. Vegetation management, such as how to maintain rain garden vegetation, mowing requirements, weeding requirements, pruning and other aspects to keep vegetation healthy. (Added November, 2012)

    d. The party responsible for performing each of the various maintenance activities described which will be recorded with final approved plans and plats.

    e. A detailed description of the procedure for both preventive and corrective maintenance activities. The preventative maintenance component will include:

        i. Periodic inspections, adjustments, and replacements.

        ii. Record-keeping of operations, inspections, and expenditures for homeowner associations, condo associations. Commercial properties are recommended to do this task also. These records need to be produced if requested by township officials or township engineer. A concise maintenance form should be provided to the property

owner or lessee to record maintenance activities. (Amended November, 2012)

f. Provision for the routine and non-routine inspection of all components within the system described:

   i. We recommend scheduled wet weather inspections of structural elements and inspection for sediment accumulation in detention basins, shall be conducted annually, with as-built plans in hand. These should be carried out by a competent property manager or professional engineer reporting to the responsible agency or owner. (Amended November, 2012)

   ii. Housekeeping inspections, such as checking for trash removal, should take place at least twice per year. These tasks can be done by landscape or grounds maintenance professionals. (Amended November, 2012)

   iii. We recommend emergency inspections on an as-needed basis, upon identification of problems; a professional engineer should conduct these inspections.

g. A description of ongoing landscape maintenance needs. Landscaping shall consist of low maintenance and/or native plant species. The proprietor will monitor the viability of plantings for at lest two years after establishment and plantings will be replaced as needed. Subsequent monitoring shall be conducted by the landowner or development association. The County Public Works Commissioner is not responsible for landscape maintenance.

h. Provision for the maintenance of vegetative buffers by landowner, development associations, conservation groups, or public agencies. Buffers must be inspected annually for evidence of erosion or concentrated flows through or around the buffer.

2. Property deed restrictions or condominium master deed documents will specify the time frame for action to address needed maintenance of storm water management facilities. These restrictions or documents will also specify that, should the private entity fail to act within this time frame, the responsible governmental entity may perform the needed maintenance and assess the costs against the property owners within the subdivision or condominium association, in accordance with Act 288 of the Public Acts of 1967.

   a. Routine maintenance of storm water management facilities will be completed per the schedule submitted with the construction plans or within 30 days of receipt of written modification by the responsible governmental entity that action is required, unless other acceptable arrangements are made with the supervising governmental entity.

   b. Emergency maintenance will be completed within 36 hours of written notification unless threat to public health, safety and welfare requires immediate action.

3. The proprietor may fulfill the obligation to ensure that a governmental entity will be responsible for drainage system maintenance by establishing a county drainage district, or any other similar mechanism approved by the County Public Works Commissioner, to provide for the permanent maintenance of storm water management facilities and necessary funding. Or, a Resolution of Intent may be completed to provide a mechanism for funding maintenance on the drainage system, see example in Appendix F. Saginaw Charter Township will not be responsible for maintenance.

4. If a County Drain is not established, the proprietor will submit evidence of a legally binding agreement with another governmental agency responsible for maintenance oversight. Saginaw Charter Township will not be responsible for maintenance.

5. A legally binding maintenance agreement will be executed before final project approval is granted. The agreement shall be included in the property deed restrictions or condominium master deed documents so that it is binding on all subsequent property owners.

6. A sample maintenance plan and annual budget is illustrated in Appendix F.

APPENDIX A

STORM DRAINAGE SYSTEM WITHIN SAGINAW CHARTER TOWNSHIP

1. ESTABLISHED SAGINAW COUNTY DRAINAGE DISTRICTS (TABLE I)
2. MICHIGAN DEPARTMENT OF TRANSPORTATION SEWER SYSTEMS
3. AREAS UNDER ONLY THE JURISDICTION OF SAGINAW CHARTER TOWNSHIP
4. PERMITS REQUIRED FROM OTHER AGENCIES
5. ZONED LAND USES/IMPERVIOUS FACTORS (TABLE II)

STORM DRAINAGE SYSTEMS WITHIN SAGINAW CHARTER TOWNSHIP

Various regulatory agencies within Saginaw Charter Township have their own design criteria for reviewing proposed developments and redevelopments in their jurisdiction. At a minimum, these requirements will have to be met as part of this plan. However, these criteria are not always consistent with the storm water requirements of the Township. Additional regulation by the Township may be necessary to insure the overall needs of the Township are addressed. It is very important that the Township review all proposed developments or improvements to assure that the proposed storm water management is consistent with the future plans of the Township. A description of the various agencies with jurisdiction over the storm drainage systems located in Saginaw Charter Township and their requirements are outlined below.

A. Established Saginaw County Drainage Districts

This section identifies the existing established County drains that fall under the jurisdiction of the Saginaw County Public Works Commissioner and their drainage districts throughout the Township and presents criteria for an engineering design. Most of the drainage infrastructure of Saginaw Charter Township is dependent on these drainage districts. The parameters for restricting flow rates, sizing storm sewers, and sizing detention basins from sites being developed or redeveloped within these districts are outlined below.

Table I is a summary of the impervious factors (**IF**) to be used when determining the allowable discharge to established Saginaw County Drains from site developments or redevelopments. A more detailed description of each county drain and the associated design requirements follows in Table II and in the Engineering Calculations section of this plan.

.

TABLE I

SAGINAW COUNTY DRAINAGE DISTRICTS
WITHIN SAGINAW CHARTER TOWNSHIP BOUNDARIES
DESIGN IMPERVIOUS FACTORS

Drain District Name	Impervious Factor (**IF**)
Amanda Tile	20%
Center Road & Branches (Combined Sewer)	0%
Horgan/M-58	0% or per M.D.O.T. Calculations
Kastorf and Branch	0%,
Otto Tile	10%
Saginaw-Zilwaukee	0%
Elmers (Saginaw Zilwaukee)	0%
Seidel & Branches	0%
Tittabawassee, Kochville, & Saginaw	0%, 30% in specified areas see Appendix
Universal	Per Original Assessment *
McCarty Road Branch (Universal)	Per Original Assessment *
Shattuck Road Tile Drain (Universal)	Per Original Assessment *
Weiss Street (Combined Sewer)	0%
Winterstein	20%

* Impervious Factor used in calculations to be same as listed in original district assessment roll. The Impervious Factor can be obtained from the Township Engineer.

Special Considerations

Boardwalk Plat	Boardwalk Plat Requirements (Appendix A)
M.D.O.T. Storm Sewers (M-46, M-47, M-58, M-84)	Per M.D.O.T. Calculations

These impervious factors apply to all parcels within the respective drainage districts, unless otherwise noted above. These impervious factors are used in only one of the methods for determining the allowable discharge from a site development or redevelopment. Other methods addressing downstream conditions will also need to be considered as outlined in the Engineering Calculations section of this report. Variances from these required design impervious factors may be allowed if supporting information is provided for the variances and the variance is determined acceptable by the Township Engineer.

Amanda Drain

Description

The Amanda Drain is located in Section 19 within Saginaw Charter Township. The location of the drain is shown on the enclosed Drainage District Base Map (DR-1937). A total of approximately 130 acres is included in the Amanda Drainage District. All 130 of these acres are located within Saginaw Charter Township. There are no branches of the Amanda Drain that are considered to be major. The present outlet of the drain consists of a 42" storm sewer which discharges to the Tittabawassee River via an open drain.

Current Zoning

The current zoning for Saginaw Charter Township is shown on the Saginaw Charter Township Zoning Map (D-3023). The current zoning located within the Amanda Drainage District consists of Low Density Residential (R-1), Medium Density Residential (R-2), Low Rise-High Density Residential (R-3), Office Business Commercial (B-1), and Community Commercial (B-3). The predominant zoning in this drainage district consists of community commercial.

Allowable Discharge (**Qa**)/ Detention Requirements

The peak storm water discharge from any proposed development or redevelopment within the drainage district shall be restricted to an allowable discharge (**Qa**). The allowable discharge shall be based on a predetermined impervious factor (**IF**) of 20%. Equations for determining the allowable discharge are outlined in Section III.

Excess storm water runoff must be detained on site. Equations for determining the required volume of detention storage are outlined in Section III. Detention storage calculations must be included with review submittals.

10 Year Design Discharge ($\mathbf{Qd_{10}}$)

The 10 Year design discharge shall be calculated based on the zoned land use percent imperviousness or on the actual imperviousness of the entire drainage area upstream of the design point, including the proposed development or redevelopment, whichever is greater. The percentage of imperviousness (**IMP**) has been determined for the various zoned land uses based on Saginaw Charter Township Zoning. The estimated **IMP** for the various land uses is outlined in Table II at the end of this section. If a different **IMP** is used, calculations showing how the proposed **IMP** was determined shall be submitted. Equations for determining the design discharge are outlined in Section III.

It must be shown that proposed property development will not significantly alter storm water flows from current conditions upstream or downstream of the property.

Center Road Drain & Branches (Combined Sewer)

Description

The Center Road Drain is located in Sections 20, 21, 28, 29, 32, and 33 within Saginaw Charter Township. The location of the drain is shown on the enclosed Drainage District Base Map (DR-1937). A total of approximately 1,250 acres is included in the Center Road & Branches Drainage District. All 1,250 of these acres are located within Saginaw Charter Township. There are several branches and relief branches of the Center Road Drain. The location of some of these branches are shown on the drainage district base map The present outlet of the drain consists of a 84" storm sewer which discharges to a reservoir and pump station for primary treatment, then to an open drain which outlets into the Tittabawassee River.

Current Zoning

The current zoning for Saginaw Charter Township is shown on the Saginaw Charter Township Zoning Map (D-3023). The current zoning located within the Center Road and Branches Drainage District consists of Low Density Residential-Transitional (R-1A), Low Density Residential (R-1), Medium Density Residential (R-2), Low Rise-High Density Residential (R-3), Office Business Commercial (B-1), and Community Commercial (B-3). The predominant zoning in this drainage district consists of low density residential and low density residential-transitional.

Allowable Discharge (**Qa**)/ Detention Requirements

The peak storm water discharge from any proposed development or redevelopment within the drainage district shall be restricted to an allowable discharge (**Qa**). The allowable discharge shall be based on a predetermined impervious factor (**IF**) of 0%. Equations for determining the allowable discharge are outlined in Section III.

Excess storm water runoff must be detained on site. Equations for determining the required volume of detention storage are outlined in Section III. Detention storage calculations must be included with review submittals.

10 Year Design Discharge (**Qd_{10}**)

The 10 Year design discharge shall be calculated based on the zoned land use percent imperviousness or on the actual imperviousness of the entire drainage area upstream of the design point, including the proposed development or redevelopment, whichever is greater. The percentage of imperviousness (**IMP**) has been determined for the various zoned land uses based on Saginaw Charter Township Zoning. The estimated **IMP** for the various land uses is outlined in Table II at the end of this section. If a different **IMP** is used, calculations showing how the proposed **IMP** was determined shall be submitted. Equations for determining the design discharge are outlined in Section III.

It must be shown that proposed property development will not significantly alter storm water flows from existing conditions upstream or downstream of the property.

Horgan Drain

Description

The Horgan Drain is located in Sections 17 and 18 within Saginaw Charter Township. The location of the drain is shown on the enclosed Drainage District Base Map (DR-1937). There are no branches of the Horgan Drain, which are considered to be major. The original drainage district of the Horgan Drain (1964) was subdivided when the Winterstein Drain was constructed in 1968 and the Otto Tile Drain was constructed in 1972. The Otto Tile Drain intercepted the Horgan Drain and now drains the upper portion of the previous Horgan drainage district. The west 660 +/- feet of the previous Horgan Drainage District is now part of the Winterstein District. The present outlet of the drain discharges to the M.D.O.T. storm sewer system on State Street (M-58) which discharges directly to the Tittabawassee River. The previous Horgan drainage district is now included in the M-58 M.D.O.T. drainage district, the Otto Tile Drainage District, or the Winterstein Drainage District.

Current Zoning

The current zoning for Saginaw Charter Township is shown on the Saginaw Charter Township Zoning Map (D-3023). The current zoning located within the Horgan Drainage District consists of Medium Density Residential (R-2) and Low Rise-High Density Residential (R-3).

Allowable Discharge (**Qa**)/ Detention Requirements

The peak storm water discharge from any proposed development or redevelopment within the drainage district shall be restricted to an allowable discharge (**Qa**). The allowable discharge shall be based on a predetermined impervious factor (**IF**) of 0% or per M.D.O.T. requirements if discharging directly to M-58. Equations for determining the allowable discharge are outlined in Section III. A copy of the M.D.O.T. permit application to discharge storm water to an M.D.O.T. storm sewer is included in Appendix B.

Excess storm water runoff must be detained on site. Equations for determining the required volume of detention storage are outlined in Section III. Detention storage calculations must be included with review submittals.

10 Year Design Discharge (**Qd_{10}**)

The 10 Year design discharge shall be calculated based on the zoned land use percent imperviousness or on the actual imperviousness of the entire drainage area upstream of the design point, including the proposed development or redevelopment, whichever is greater. The percentage of imperviousness (**IMP**) has been determined for the various zoned land uses based on Saginaw Charter Township Zoning. The estimated **IMP** for the various land uses is outlined in Table II at the end of this section. If a different **IMP** is used, calculations showing how the proposed **IMP** was determined shall be submitted. Equations for determining the design discharge are outlined in Section III.

It must be shown that proposed property development will not significantly alter storm water flows from current conditions upstream or downstream of the property.

Kastorf Drain and Branch

Description

The Kastorf Drain and branch is located in Sections 5, 6, 7, 8, 17, and 18 within Saginaw Charter Township. The location of the drain is shown on the enclosed Drainage District Base Map (DR-1937). A total of approximately 1,440 acres is included in the Kastorf and Branch Drainage District. Approximately 1,380 of these acres are located within Saginaw Charter Township. The Kastorf Drain consists of an open drain with one branch along Shattuck Road referred to as the Branch of the Kastorf Drain. The Kastorf Drain outlets to an open drain section of the Tittabawassee, Kochville, and Saginaw Drain.

Current Zoning

The current zoning for Saginaw Charter Township is shown on the Saginaw Charter Township Zoning Map (D-3023). The current zoning located within the Kastorf and Branch Drainage District consists of Agriculture (A-2), Low Density Residential-Transitional (R-1A), Low Density Residential (R-1), Medium density Residential (R-2), Low Rise - High Density Residential (R-3), Office Business Commercial (B-1), Neighborhood Commercial (B-2), Community Commercial (B-3), General Commercial (B-4), and Science and Industry (M-1). The predominant zoning in this drainage district consists of agricultural and low density residential.

Allowable Discharge (**Qa**)/ Detention Requirements

The peak storm water discharge from any proposed development or redevelopment within the drainage district shall be restricted to an allowable discharge (**Qa**). The allowable discharge shall be based on a predetermined impervious factor (**IF**) of 0%. Equations for determining the allowable discharge are outlined in Section III.

Excess storm water runoff must be detained on site. Equations for determining the required volume of detention storage are outlined in Section III. Detention storage calculations must be included with review submittals.

10 Year Design Discharge (**Qd_{10}**)

The 10 Year design discharge shall be calculated based on the zoned land use percent imperviousness or on the actual imperviousness of the entire drainage area upstream of the design point, including the proposed development or redevelopment, whichever is greater. The percentage of imperviousness (**IMP**) has been determined for the various zoned land uses based on Saginaw Charter Township Zoning. The estimated **IMP** for the various land uses is outlined in Table II at the end of this section. If a different **IMP** is used, calculations showing how the proposed **IMP** was determined shall be submitted. Equations for determining the design discharge are outlined in Section III.

It must be shown that proposed property development will not significantly alter storm water flows from current conditions upstream or downstream of the property.

Otto Tile Drain

Description

The Otto Tile Drain is located in Sections 17 and 18 within Saginaw Charter Township. The location of the drain is shown on the enclosed Drainage District Base Map (DR-1937). A total of approximately 330 acres is included in the Otto Tile Drainage District. All of these 330 acres are located within Saginaw Charter Township. There are no branches of the Otto Tile Drain which are considered to be major. When the Otto Drain was tiled in 1972 the Horgan Drain was intercepted. The upper portion of the Horgan drainage district is now part of the Otto Tile drainage district. The present outlet of the drain consists of a 48" storm sewer which discharges beneath M-47 to the Tittabawassee River via an open drain.

Current Zoning

The current zoning for Saginaw Charter Township is shown on the Saginaw Charter Township Zoning Map (D-3023). The current zoning located within the Otto Tile Drainage District consists of Agriculture (A-2), Low Density Residential-Transitional (R-1A), Low Density Residential (R-1), Medium Density Residential (R-2), Low Rise-High Density Residential (R-3), Office Business Commercial (B-1), Neighborhood Commercial (B-2), Community Commercial (B-3), and General Commercial (B-4). The predominant zoning in this drainage district consists of agricultural, low density residential-transitional, and low rise-high density residential.

Allowable Discharge (**Qa**)/ Detention Requirements

The peak storm water discharge from any proposed development or redevelopment within the drainage district shall be restricted to an allowable discharge (**Qa**). The allowable discharge shall be based on a predetermined impervious factor (**IF**) of 10%. Equations for determining the allowable discharge are outlined in Section III.

Excess storm water runoff must be detained on site. Equations for determining the required volume of detention storage are outlined in Section III. Detention storage calculations must be included with review submittals.

10 Year Design Discharge (**Qd_{10}**)

The 10 year design discharge shall be calculated based on the zoned land use percent imperviousness or on the actual imperviousness of the entire drainage area upstream of the design point, including the proposed development or redevelopment, whichever is greater. The percentage of imperviousness (**IMP**) has been determined for the various zoned land uses based on Saginaw Charter Township Zoning. The estimated **IMP** for the various land uses is outlined in Table II at the end of this section. If a different **IMP** is used, calculations showing how the proposed **IMP** was determined shall be submitted. Equations for determining the design discharge are outlined in Section III.

It must be shown that proposed property development will not significantly alter storm water flows from current conditions upstream or downstream of the property.

Saginaw-Zilwaukee Drain

Description

The Saginaw-Zilwaukee Drain is located in Sections 2, 3, 4, and 5 within Saginaw Charter Township. The location of the drain is shown on the enclosed Drainage District Base Map (DR-1937). A total of approximately 2,530 acres is included in the Saginaw-Zilwaukee Drainage District. Approximately 720 of these acres are located within Saginaw Charter Township. The Elmers Drain is the only contributing branch, which is considered to be major. A description of the Elmers Drain has been provided in this section. The present outlet of the drain consists of a 113" span by 72" box culvert that discharges to the Saginaw River via an open drain.

Current Zoning

The current zoning for Saginaw Charter Township is shown on the Saginaw Charter Township Zoning Map (D-3023). The current zoning within the Saginaw-Zilwaukee Drainage District consists of Agriculture (A-2), Low Density Residential-Transitional (R-1A), Low Density Residential (R-1), Medium Density Residential (R-2), Low Rise-High Density Residential (R-3), Office Business Commercial (B-1), Community Commercial (B-3), Highway Service Commercial (B-3A), General Commercial (B-4), and Science and Industry (M-1). The predominant zoning in this drainage district consists of agricultural, low density residential, and community commercial.

Allowable Discharge (**Qa**)/ Detention Requirements

The peak storm water discharge from any proposed development or redevelopment within the drainage district shall be restricted to an allowable discharge (**Qa**). The allowable discharge shall be based on a predetermined impervious factor (**IF**) of 0%. Equations for determining the allowable discharge are outlined in Section III.

Excess storm water runoff must be detained on site. Equations for determining the required volume of detention storage are outlined in Section III. Detention storage calculations must be included with review submittals.

10 Year Design Discharge ($\mathbf{Qd}_{10}$)

The 10 year design discharge shall be calculated based on the zoned land use percent imperviousness or on the actual imperviousness of the entire drainage area upstream of the design point, including the proposed development or redevelopment, whichever is greater. The percentage of imperviousness (**IMP**) has been determined for the various zoned land uses based on Saginaw Charter Township Zoning. The estimated **IMP** for the various land uses is outlined in Table II at the end of this section. If a different **IMP** is used, calculations showing how the proposed **IMP** was determined shall be submitted. Equations for determining the design discharge are outlined in Section III.

It must be shown that proposed property development will not significantly alter storm water flows from current conditions upstream or downstream of the property.

Elmers Drain (Saginaw - Zilwaukee)

Description

The Elmers Drain is located in Sections 2, 3, and 4 within Saginaw Charter Township. The location of the drain is shown on the enclosed Drainage District Base Map (DR-1937). A total of approximately 440 acres is included in the Elmers Drainage District. All 440 of these acres are located within Saginaw Charter Township. There are no branches of the Elmers Drain that are considered to be major. The present drain outlet consists of a 66" storm sewer which discharges to an open drain portion of the Saginaw-Zilwaukee Drain via an open drain.

Current Zoning

The current zoning for Saginaw Charter Township is shown on the Saginaw Charter Township Zoning Map (D-3023). The current zoning located within the Saginaw-Zilwaukee Drainage District consists of Agriculture (A-2), Low Density Residential-Transitional (R-1A), Low Density Residential (R-1), Medium density Residential (R-2), Low Rise - High Density Residential (R-3), Office Business Commercial (B-1), and Community Commercial (B-3). The predominant zoning in this drainage district consists of low density residential and community commercial.

Allowable Discharge (**Qa**)/ Detention Requirements

The peak storm water discharge from any proposed development or redevelopment within the drainage district shall be restricted to an allowable discharge (**Qa**). The allowable discharge shall be based on a predetermined impervious factor (**IF**) of 0%. Equations for determining the allowable discharge are outlined in Section III.

Excess storm water runoff must be detained on site. Equations for determining the required volume of detention storage are outlined in Section III. Detention storage calculations must be included with review submittals.

10 Year Design Discharge ($\mathbf{Qd}_{10}$)

The 10 year design discharge shall be calculated based on the zoned land use percent imperviousness or on the actual imperviousness of the entire drainage area upstream of the design point, including the proposed development or redevelopment, whichever is greater. The percentage of imperviousness (**IMP**) has been determined for the various zoned land uses based on Saginaw Charter Township Zoning. The estimated **IMP** for the various land uses is outlined in Table II at the end of this section. If a different **IMP** is used, calculations showing how the proposed **IMP** was determined shall be submitted. Equations for determining the design discharge are outlined in Section III.

It must be shown that proposed property development will not significantly alter storm water flows from current conditions upstream or downstream of the property.

Seidel Drain & Branches

Description

The Seidel Drain is located in Sections 29, 30, and 32 within Saginaw Charter Township. The location of the drain is shown on the enclosed Drainage District Base Map (DR-1937). A total of approximately 390 acres is included in the Seidel and Branches Drainage District. All 390 of these acres are located within Saginaw Charter Township. There are no branches of the Seidel Drain, which are considered to be major. The present outlet of the drain consists of a 48" storm sewer, which discharges to the Tittabawassee River via an open drain.

Current Zoning

The current zoning for Saginaw Charter Township is shown on the Saginaw Charter Township Zoning Map (D-3023). The current zoning located within the Seidel Drainage District consists of Low Density Residential-Transitional (R-1A), Low Density Residential (R-1), Medium Density Residential (R-2), Low Rise-High Density Residential (R-3), and Office Business Commercial (B-1). The predominant zoning in this drainage district consists of low-density residential-transitional, low density residential, and office business commercial.

Allowable Discharge (**Qa**)/ Detention Requirements

The peak storm water discharge from any proposed development or redevelopment within the drainage district shall be restricted to an allowable discharge (**Qa**). The allowable discharge shall be based on a predetermined impervious factor (**IF**) of 0%. Equations for determining the allowable discharge are outlined in Section III.

Excess storm water runoff must be detained on site. Equations for determining the required volume of detention storage are outlined in Section III. Detention storage calculations must be included with review submittals.

10 Year Design Discharge ($\mathbf{Qd_{10}}$)

The 10 Year design discharge shall be calculated based on the zoned land use percent imperviousness or on the actual imperviousness of the entire drainage area upstream of the design point, including the proposed development or redevelopment, whichever is greater. The percentage of imperviousness (**IMP**) has been determined for the various zoned land uses based on Saginaw Charter Township Zoning. The estimated **IMP** for the various land uses is outlined in Table II at the end of this section. If a different **IMP** is used, calculations showing how the proposed **IMP** was determined shall be submitted. Equations for determining the design discharge are outlined in Section III.

It must be shown that proposed property development will not significantly alter storm water flows from current conditions upstream or downstream of the property.

Tittabawassee, Kochville, and Saginaw Drain

Description

The Tittabawassee, Kochville, and Saginaw (TKS) Drain is located in Sections 1, 6, 7, and 12 within Saginaw Charter Township. The location of the drain is shown on the enclosed Drainage District Base Map (DR-1937). A total of approximately 1,790 acres is included in the Tittabawassee, Kochville, and Saginaw Drainage District. Approximately 730 of these acres are located within Saginaw Charter Township. There are no branches of the Tittabawassee, Kochville, and Saginaw Drain, which are considered to be major. The present drain is an open drain with several driveway and road crossings. The present outlet of the drain is an open drain that discharges to the Tittabawassee River.

Current Zoning

The current zoning for Saginaw Charter Township is shown on the Saginaw Charter Township Zoning Map (D-3023). The current zoning located within the Tittabawassee, Kochville, and Saginaw Drainage District consists of Agriculture (A-2) and Low Density Residential (R-1). The predominant zoning in this drainage district consists of agricultural.

Allowable Discharge (**Qa**)/ Detention Requirements

The peak storm water discharge from any proposed development or redevelopment within the drainage district shall be restricted to an allowable discharge (**Qa**). The allowable discharge shall be based on a predetermined impervious factor (**IF**) of 0%. Portions of the SW1/4 of section 6 and portions of the NW1/4 of section 7 may have the allowable discharge based on a predetermined impervious factor (**IF**) of 30% see shaded areas of map supplement for TKS drain at the end of Appendix A, or contact the Township Engineer. Equations for determining the allowable discharge are outlined in Section III. (Amended, 2002)

Excess storm water runoff must be detained on site. Equations for determining the required volume of detention storage are outlined in Section III. Detention storage calculations must be included with review submittals.

10 Year Design Discharge (**Qd_{10}**)

The 10 year design discharge shall be calculated based on the zoned land use percent imperviousness or on the actual imperviousness of the entire drainage area upstream of the design point, including the proposed development or redevelopment, whichever is greater. The percentage of imperviousness (**IMP**) has been determined for the various zoned land uses based on Saginaw Charter Township Zoning. The estimated **IMP** for the various land uses is outlined in Table II at the end of this section. If a different **IMP** is used, calculations showing how the proposed **IMP** was determined shall be submitted. Equations for determining the design discharge are outlined in Section III.

It must be shown that proposed property development will not significantly alter storm water flows from current conditions upstream or downstream of the property.

Universal Drain

Description

The Universal Drain is located in Sections 2, 3, 4, 5, 8, 9, 10, 11, 14, 15, 16, and 17 within Saginaw Charter Township. The location of the drain is shown on the enclosed Drainage District Base Map (DR-1937). A total of approximately 4,980 acres is included in the Universal Drainage District. Approximately 3,280 of these acres are located within Saginaw Charter Township. There are several major contributing branches of the Universal Drain in Saginaw Charter Township, including the Center Road Branch, the McCarty Road Branch, the Bay Road Tile Drain, and the Shattuck Road Branch of the Bay Road Tile Drain.

In Saginaw Charter Township, the present outlet of the Universal Drain consists of a 108" diameter storm sewer which discharges to the Saginaw River via an open drain. The Center Road Branch outlet consists of a 30" storm sewer which discharges to an open drain portion of the upper Universal Drain. The McCarty Road Branch outlet consists of a 78" diameter storm sewer which discharges to an open drain portion of the Universal Drain. The Bay Road Tile Drain outlet consists of a 48" storm sewer discharging to the Universal Drain at a 90" storm sewer. The Shattuck Road Branch of the Bay Road Tile Drain consists of a 42" storm sewer which discharges to the upper end of the Bay Road Tile Drain at a 48" storm sewer.

Current Zoning

The current zoning for Saginaw Charter Township is shown on the Saginaw Charter Township Zoning Map (D-3023). The current zoning located within the Saginaw-Zilwaukee Drainage District consists of Agriculture (A-2), Low Density Residential-Transitional (R-1A), Low Density Residential (R-1), Medium Density Residential (R-2), Low Rise-High Density Residential (R-3), Office Business Commercial (B-1), Neighborhood Commercial (B-2), Community Commercial (B-3), General Commercial (B-4), and Science and Industry (M-1). The predominant zoning in this drainage district consists of low-density residential and general commercial.

Allowable Discharge (**Qa**)/ Detention Requirements

The peak storm water discharge from any proposed development or redevelopment within the drainage district shall be restricted to an allowable discharge (**Qa**). The allowable discharge shall be based on an impervious factors (**IF**) previously determined in the original assessment roll for the drainage district. This **IF** can be obtained from the Township Engineer. Equations for determining the allowable discharge are outlined in Section III.

Excess storm water runoff must be detained on site. Equations for determining the required volume of detention storage are outlined in Section III. Detention storage calculations must be included with review submittals.

10 Year Design Discharge ($\mathbf{Qd_{10}}$)

The 10 year design discharge shall be calculated based on the zoned land use percent imperviousness or on the actual imperviousness of the entire drainage area upstream of the design point, including the proposed development or redevelopment, whichever is greater. The 0 percentage of imperviousness (**IMP**) has been determined for the various zoned land uses based on Saginaw Charter Township Zoning. The estimated **IMP** for the various land uses is outlined

in Table II at the end of this section. If a different **IMP** is used, calculations showing how the proposed **IMP** was determined shall be submitted. Equations for determining the design discharge are outlined in Section III.

It must be shown that proposed property development will not significantly alter storm water flows from current conditions upstream or downstream of the property.

McCarty Road Branch (Universal Drain)

Description

The McCarty Road Branch of the Universal Drain is located in Sections 2, 3, 4, 5, 8, 9, 10, 11, within Saginaw Charter Township. The location of the drain is shown on the enclosed Drainage District Base Map (DR-1937). A total of approximately 1170 acres is included in the Universal Drainage District. All 1170 of these acres are located within Saginaw Charter Township.

The present outlet of the McCarty Road Branch of the Universal Drain consists of a 78" diameter storm sewer which discharges to the open drain portion of the Universal Drain via an open drain.

Current Zoning

The current zoning for Saginaw Charter Township is shown on the Saginaw Charter Township Zoning Map (D-3023). The current zoning located within the Saginaw-Zilwaukee Drainage District consists of Agriculture (A-2), Low Density Residential-Transitional (R-1A), Low Density Residential (R-1), Medium Density Residential (R-2), Low Rise-High Density Residential (R-3), Office Business Commercial (B-1), Neighborhood Commercial (B-2), Community Commercial (B-3), General Commercial (B-4), and Science and Industry (M-1). The predominant zoning in this drainage district consists of low-density residential and general commercial.

Allowable Discharge (**Qa**)/ Detention Requirements

The peak storm water discharge from any proposed development or redevelopment within the drainage district shall be restricted to an allowable discharge (**Qa**). The allowable discharge shall be based on impervious factors (**IF**) previously determined in the original assessment roll for the drainage district. This **IF** can be obtained from the Township Engineer. Equations for determining the allowable discharge are outlined in Section III.

Excess storm water runoff must be detained on site. Equations for determining the required volume of detention storage are outlined in Section III. Detention storage calculations must be included with review submittals.

10 Year Design Discharge ($\mathbf{Qd_{10}}$)

The 10 year design discharge shall be calculated based on the zoned land use percent imperviousness or on the actual imperviousness of the entire drainage area upstream of the design point, including the proposed development or redevelopment, whichever is greater. The percentage of imperviousness (**IMP**) has been determined for the various zoned land uses based on Saginaw Charter Township Zoning. The estimated **IMP** for the various land uses is outlined in Table II at the end of this section. If a different **IMP** is used, calculations showing how the proposed **IMP** was determined shall be submitted. Equations for determining the design discharge are outlined in Section III.

It must be shown that proposed property development will not significantly alter storm water flows from current conditions upstream or downstream of the property.

Shattuck Road Tile Drain (Universal Drain)

Description

The Shattuck Road Tile Drain is located in Sections 11 and 14 within Saginaw Charter Township. The location of the drain is shown on the enclosed Drainage District Base Map (DR-1937). A total of approximately 260 acres is included in the Shattuck Road Tile Drainage District. All of these 260 acres are located within Saginaw Charter Township. There are no branches of the Shattuck Road Tile Drain that are considered to be major. The present outlet of the drain consists of a 48" storm sewer which discharges to the upper end of the Branch of the Universal Drain at a 54" storm sewer.

Current Zoning

The current zoning for Saginaw Charter Township is shown on the Saginaw Charter Township Zoning Map (D-3023). The current zoning located within the Shattuck Road Tile Drainage District consists of Low Density Residential-Transitional (R-1A), Low Density Residential (R-1), Medium Density Residential (R-2) and Office Business Commercial (B-1). The predominant zoning in the district consists of low density residential and low density residential- transitional.

Allowable Discharge (**Qa**)/ Detention Requirements

The peak storm water discharge from any proposed development or redevelopment within the drainage district shall be restricted to an allowable discharge (**Qa**). The allowable discharge shall be based on impervious factors (**IF**) previously determined in the original assessment roll for the drainage district. This **IF** can be obtained from the Township or Township Engineer. Equations for determining the allowable discharge are outlined in Section III.

Excess storm water runoff must be detained on site. Equations for determining the required volume of detention storage are outlined in Section III. Detention storage calculations must be included with review submittals.

10 Year Design Discharge (**Qd_{10}**)

The 10 year design discharge shall be calculated based on the zoned land use percent imperviousness or on the actual imperviousness of the entire drainage area upstream of the design point, including the proposed development or redevelopment, whichever is greater. The percentage of imperviousness (**IMP**) has been determined for the various zoned land uses based on Saginaw Charter Township Zoning. The estimated **IMP** for the various land uses is outlined in Table II at the end of this section. If a different **IMP** is used, calculations showing how the proposed **IMP** was determined shall be submitted. Equations for determining the design discharge are outlined in Section III.

It must be shown that proposed property development will not significantly alter storm water flows from current conditions upstream or downstream of the property.

Weiss Street Drain (Combined Sewer)

Description

The Weiss Street Drain is located in Sections 14, 15, 16, and 21 within Saginaw Charter Township. The location of the drain is shown on the enclosed Drainage District Base Map (DR-1937). A total of approximately 2,960 acres are included in the Weiss Street Drainage District. Approximately 1,400 of these acres are located within Saginaw Charter Township. There are several branches and relief branches of the Weiss Street Drain. The locations of some of these branches are shown on the drainage district base map. Two detention basins exist in the district and in-system storage is currently being constructed. The drain currently discharges to the City of Saginaw Wastewater Treatment Plant.

Current Zoning

The current zoning for Saginaw Charter Township is shown on the Saginaw Charter Township Zoning Map (D-3023). The current zoning located within the Weiss Street Drainage District consists of Low Density Residential-Transitional (R-1A), Low Density Residential (R-1), Medium Density Residential (R-2), Low Rise-High Density Residential (R-3), Office Business Commercial (B-1), Neighborhood Commercial (B-2), Community Commercial (B-3), General Commercial (B-4), and Science and Industry (M-1). The predominant zoning in this drainage district consists of low density residential and low density residential - transitional.

Allowable Discharge (**Qa**)/ Detention Requirements

The peak storm water discharge from any proposed development or redevelopment within the drainage district shall be restricted to an allowable discharge (**Qa**). The allowable discharge shall be based on a predetermined impervious factor (**IF**) of 0%. Equations for determining the allowable discharge are outlined in Section III.

Excess storm water runoff must be detained on site. Equations for determining the required volume of detention storage are outlined in Section III. Detention storage calculations must be included with review submittals.

10 Year Design Discharge ($\mathbf{Qd}_{10}$)

The 10 year design discharge shall be calculated based on the zoned land use percent imperviousness or on the actual imperviousness of the entire drainage area upstream of the design point, including the proposed development or redevelopment, whichever is greater. The percentage of imperviousness (**IMP**) has been determined for the various zoned land uses based on Saginaw Charter Township Zoning. The estimated **IMP** for the various land uses is outlined in Table II at the end of this section. If a different **IMP** is used, calculations showing how the proposed **IMP** was determined shall be submitted. Equations for determining the design discharge are outlined in Section III.

It must be shown that proposed property development will not significantly alter storm water flows from current conditions upstream or downstream of the property.

Winterstein Drain & Branches

Description

The Winterstein Drain is located in Sections 17, 18, 19, 20 and 29 within Saginaw Charter Township. The location of the drain is shown on the enclosed Drainage District Base Map (DR-1937). A total of approximately 1,180 acres is included in the Winterstein Drainage District. All 1,180 of these acres are located within Saginaw Charter Township. There are several small branches of the Winterstein Drain. The locations of these branches are shown on the drainage district base map. The present outlet of the drain consists of a 72" storm sewer which discharges to the Tittabawassee River via an open drain.

Current Zoning

The current zoning for Saginaw Charter Township is shown on the Saginaw Charter Township Zoning Map (D-3023). The current zoning located within the Winterstein Drainage District consists of Low Density Residential-Transitional (R-1A), Low Density Residential (R-1), Medium Density Residential (R-2), Low Rise-High Density Residential (R-3), Office Business Commercial (B-1), Neighborhood Commercial (B-2), Community Commercial (B-3), and General Commercial (B-4). The predominant zoning in this drainage district consists of low-density residential and general commercial.

Allowable Discharge (**Qa**)/ Detention Requirements

The peak storm water discharge from any proposed development or redevelopment within the drainage district shall be restricted to an allowable discharge (**Qa**). The allowable discharge shall be based on a predetermined impervious factor (**IF**) of 20%. Equations for determining the allowable discharge are outlined in Section III.

Excess storm water runoff must be detained on site. Equations for determining the required volume of detention storage are outlined in Section III. Detention storage calculations must be included with review submittals.

10 Year Design Discharge ($\mathbf{Qd_{10}}$)

The 10 year design discharge shall be calculated based on the zoned land use percent imperviousness or on the actual imperviousness of the entire drainage area upstream of the design point, including the proposed development or redevelopment, whichever is greater. The percentage of imperviousness (**IMP**) has been determined for the various zoned land uses based on Saginaw Charter Township Zoning. The estimated **IMP** for the various land uses is outlined in Table II at the end of this section. If a different **IMP** is used, calculations showing how the proposed **IMP** was determined shall be submitted. Equations for determining the design discharge are outlined in Section III.

It must be shown that proposed property development will not significantly alter storm water flows from current conditions upstream or downstream of the property.

B. Michigan Department of Transportation (M.D.O.T.) Storm Sewer Systems

Four M.D.O.T. Highways exist in Saginaw Charter Township. These Highways include; Gratiot Road (**M-46**), State Street (**M-58**), Midland Road (**M-47**), and Bay Road (**M-84**). Any proposed developments discharging directly to M.D.O.T. owned storm sewers will require an M.D.O.T. Storm Water Discharge Permit. A web site address of where to obtain this permit application is included in Appendix A of this document.

C. Areas Only Under Jurisdiction of Saginaw Charter Township

Description

Several areas within Saginaw Charter Township are not incorporated into established county drainage districts and storm water flows are not regulated by the M.D.E.Q., M.D.O.T., or the Saginaw County Road Commission. These areas can be located on the Township drainage district base map. A majority of these areas border the Tittabawassee River. The zoning in these areas is diverse.

Allowable Discharge (**Qa**)/ Detention Requirements

The peak storm water discharge from any proposed development or redevelopment within the drainage district shall be restricted to an allowable discharge (**Qa**). The allowable discharge shall be based on a predetermined impervious factor (**IF**) of 0%. Equations for determining the allowable discharge are outlined in Section III. A proposed development will be allowed to discharge storm water unrestricted if discharging directly to the Saginaw River or Tittabawassee River and township engineering approval and downstream property owners will not be adversely affected by the discharge. Any direct discharge to the Saginaw River or Tittabawassee River will require a USACE / MDEQ Joint Permit before discharge; the site will need to meet all water quality requirements required by the MDEQ. (Amended November, 2012)

Excess storm water runoff must be detained on site. Equations for determining the required volume of detention storage are outlined in Section III. Detention storage calculations must be included with review submittals.

10 Year Design Discharge (**Qd_{10}**)

The 10 year design discharge shall be calculated based on the zoned land use percent imperviousness or on the actual imperviousness of the entire drainage area upstream of the design point including the proposed development or redevelopment. The percentage of imperviousness (**IMP**) has been determined for the various zoned land uses based on Saginaw Charter Township Zoning. The estimated **IMP** for the various land uses is outlined in Table II at the end of this section. If a different **IMP** is used, calculations showing how the proposed **IMP** was determined shall be submitted. Equations for determining the design discharge are outlined in Section III.

It must be shown that proposed property development will not significantly alter storm water flows from current conditions upstream or downstream of the property.

D. Permits Required from Other Agencies

If the site is located within the jurisdiction of other agencies, further permitting may be required. Permits related to storm water discharge control may need to be filed with the:

- Saginaw County Public Works Commissioner who has jurisdiction over established county drains. Proposed developments which outlet directly to an established county drain and sites needing plat approval must be reviewed and approved by the Saginaw County Public Works Commissioner.

  Saginaw County Public Works Commissioner also issues soil erosion and sedimentation control permits. A soil erosion and sedimentation control permit is required for any developments disturbing more than one acre of land. The permit is in Appendix C or available at the following website:

  http//www.saginawcounty.com/Publicworks/permits_forms.htm.

- Saginaw County Road Commission which has or shares jurisdiction over drainage along county roads and county right-of-ways within Saginaw Charter Township. Sites located along county road right-of-way and discharging to Road Commission drainage systems must obtain a permit from the Road Commission. When a crossing is installed over a County roadside drain, a permit must be obtained from the Road Commission.

- Michigan Department of Transportation (M.D.O.T.) which has or shares jurisdiction over drainage along state highways and state right-of-way within Saginaw Charter Township. Sites located along M.D.O.T. right-of-way and discharging to M.D.O.T. drainage systems must obtain a permit from M.D.O.T. An application for this permit is included in Appendix C of this document.

- Michigan Department of Environmental Quality (M.D.E.Q.) which has jurisdiction over proposed work within the 100 year floodplain, inland lake and stream areas, and wetland areas. A permit must be obtained for work proposed in these areas. An application for permit from M.D.E.Q. is provided in Appendix C.

  In addition, the M.D.E.Q. is responsible for implementing the National Pollution Discharge Elimination System (NPDES) Storm Water Permitting Program. The M.D.E.Q. has developed a Permit-by-Rule for construction activities.

  Construction activities that disturb 1 or more acres of land and have a point source discharge of storm water to waters of the state are required to obtain permit coverage after March 10, 2003. In the state of Michigan, a process called "permit-by-rule" has been adopted for issuing the necessary coverage. This process is dependent on the local soil erosion and sedimentation control program and eliminates the longer processing time of double permitting. The DEQ began issuing permits in Michigan in 1992.

In addition, as a requirement of permit coverage, each construction activity is required to have its soil erosion and sedimentation control measures inspected on a regular basis by a certified storm water operator. Currently, the certification program is an on going process in each of the State's district offices. (Amended, 2002)

How do I get a permit?

First a soil erosion and sedimentation control (SESC) permit must be obtained from the Saginaw County Public Works Commissioner's Office. Once obtained, you must review the Permit-By-Rule. If the site will disturb more than 5 acres, then submit a completed Notice of Coverage (NOC) form, along with the required attachments (location map and $400.00 fee) to the address on the NOC.

The Notice of Coverage must be obtained prior to construction from the M.D.E.Q. for site developments or redevelopments where there is a total land disturbance of 5 or more acres after March 10, 2003. The **Notice of Coverage** or **Notice of Coverage Renewal** forms can be obtained at the following website:

http://michigan.gov/deq/0,4561,7-135-3313_3682_3716-23997--,00.html

or in Appendix C. Under the Permit-by-Rule, the owner is required to obtain a Certified Storm Water Operator to inspect the site during construction and maintain appropriate records for the construction site. These records must be available for review by the Township Engineer, Public Works Commissioner, or MDEQ-Water Resources division. (Amended, 2002)

E. Zoned Land Uses/ Percent Imperviousness (IMP)

An estimate of the future percent of impervious surface has been made for all of the zoned land uses shown on the Saginaw Charter Township Zoning Map (D-3023). The percent of imperviousness is based on the proposed land usage as required by the Township's zoning ordinance. The zoned land use and their estimated percent imperviousness (**IMP**) are summarized in Table II on the following page. The **IMP** will be used for the design of storm drainage systems that will be maintained by the Saginaw Public Works Commissioner after construction of the storm drainage system is complete.

TABLE II

PERCENT OF IMPERVIOUSNESS BASED ON ZONED LAND USAGE

Zoned Land Usage	Percent Imperviousness (**IMP**)
Manufacturing (M-1)	50 *
Science & Industry (M-2)	50 *
General Commercial (B-4)	50 *
Highway Service Commercial (B-3A)	50 *
Community Commercial (B-3)	50 *
Neighborhood Commercial (B-2)	50 *
Office Business Commercial (B-1)	50 *
High Rise Intensive (R-4)	50 *
Low Rise-High Density Residential (R-3)	40 *
Medium Density Residential (R-2)	30 *
Low Density Residential (R-1)	20 *
Low Density Residential-Transitional (R-1A)	20 *
Agricultural (A-2)	N/A*
Floodplain Conservation (FC-1)	N/A*

* These percentages of Imperviousness are assumed minimum values. The actual proposed and/or existing amount of impervious surface will be used when designing the storm sewer system. The basis for determining the proposed and/or existing amount of impervious surface shall be submitted with calculations.

APPENDIX B

A. SAGINAW CHARTER TOWNSHIP PERMIT APPLICATION AND CHECKLIST

B. SAMPLE STORM WATER MANAGEMENT PERMIT

C. TYPICAL DAILY INSPECTION REPORT FORM

D. TOWNSHIP ENGINEER FINAL INSPECTION FORMS

E. CONTRACTOR'S CERTIFICATION OF STORM SEWER CONSTRUCTION FORM

F. ENGINEER'S CERTIFICATION OF STORM SEWER CONSTRUCTION FORM

G. REQUEST FOR EXEMPTION

STORM WATER PERMIT APPLICATION

PROJECT NAME:	
Property Tax Identification #:	
Site Plan Review Date:	
Date Applied:	
Deposit Amount Submitted:	
NAME OF DEVELOPER/OWNER:	**ENGINEER/ARCHITECT:**
Contact Person:	Contact Person:
Street Address:	Street Address:
City, State, Zip:	City, State, Zip:
Telephone: Fax:	Telephone: Fax:
Email:	Email:
PROJECT LOCATION:	
Street Address:	
Name of Subdivision/Plat:	
Drainage District:	
STORM WATER DESIGN INFORMATION (*Calculation must be submitted for verification. Calculations must have clearly labeled headings, clearly labeled formulas, and clearly labeled units.)	
Type of Development (Circle): *COMMERCIAL SITE, INDUSTRIAL SITE, RESIDENTIAL PLATTED, RESIDENTIAL CONDOMINIUM, OTHER*	
*AREA OF DEVELOPMENT (acres):	
*AREA OF CONTRIBUTING DRAINAGE DISTRICT (acres):	
*AREA OF EXISTING IMPERVIOUS SURFACE (acres):	
*AREA OF PROPOSED IMPERVIOUS SURFACE (acres):	
*ALLOWABLE DISCHARGE RATE (Q_a) (cfs):	
*TOTAL VOLUME OF STORAGE REQUIRED (cu. ft.)	
*TOTAL VOLUME OF STORAGE DESIGNED (cu. ft.)	
10 YR DESIGN STORM WATER DETENTION STORAGE ELEVATION:	
EMERGENCY OVERFLOW/MAXIMUM STORAGE ELEVATION:	
LOWEST FINISHED FLOOR ELEVATION:	
OUTLET DRAIN SIZE AND DESIGN FLOW CAPACITY:	
OUTLET DRAIN INVERT ELEVATION:	
LATITUDE / LONGITUDE FOR OUTLET LOCATION	N: / W:
DESIGN IMPERVIOUS FACTOR (IF):	
*10 YEAR DESIGN DISCHARGE (cfs):	
*HEAD DIFFERENTIAL THROUGH RESTRICTOR (ft.):	
*DIAMETER OF PROPOSED RESTRICTOR (in):	
*ACTUAL RESTRICTED DISCHARGE (cfs):	
AUTHORIZED SIGNATURE DATE	PLEASE USE AND ATTACH DRAINAGE PLAN CHECKLIST TO ASSURE ALL INFORMATION IS PRESENT FOR REVIEW

The Owner/Developer must provide a Complete Storm Water Permit Submittal to Saginaw Charter Township for review by the Saginaw Charter Township Engineer. This includes a completed permit application with calculations, three complete sets of the site drainage and grading plan, one copy of the calculations for allowable discharge and on-site storage requirements as prepared by a Registered Professional Engineer or Architect, any other supporting information, and completion of the drainage checklist outlined below.

Complete the drainage checklist by checking each of the following items after you have verified they are clearly indicated on the plan:

- ☐ Total acres of site.
- ☐ Total acres of watershed draining through the site outlet.
- ☐ Drainage Distrct and impervious factor. Drainage district lines, including subdistrict lines, contributing to individual storm sewers and rear lot drainage systems, showing all land to be drained through proposed drainage system, including rear lot drainage systems.
- ☐ Location of site, including dimension to nearest intersection, road, or section line.
- ☐ Existing and proposed ground elevations at maximum 50 foot centers, including shots on perimeter of site and 50 feet beyond or contour lines at 1 foot intervals extending 50 feet beyond the site limits.
- ☐ Existing and proposed elevations at edge of pavement or buildings within 50 feet of site.
- ☐ Existing and proposed elevations of top of curb, gutter, ditch line, and centerline of road at maximum 50 feet intervals within 50 feet of site.
- ☐ Rim and invert elevations of existing catch basins, manholes, sewers, and culverts.
- ☐ Location of all existing and proposed utilities, watermain, storm drains, sanitary sewer, and corresponding right-of-ways.
- ☐ Horizontal control of all storm water drainage facilities and building locations.
- ☐ Location of proposed lawn/landscape areas, paved areas, and building location.
- ☐ Location, size, length, slope, and type of proposed storm sewer and rear lot drains.
- ☐ Rim and invert elevation(s) of proposed manholes and catch basins, including rear lot drainage.
- ☐ Location of on-site storage showing contour line for top of storage elevation.
- ☐ Provide sufficient dimensions, cross-sections, profiles, tie downs, and horizontal controls to determine the location and size of proposed storm sewers and detention/retention areas. This information will be used for verifying proposed detention/retention volume calculations in grassed and paved areas.
- ☐ Location and elevation of emergency overflow.
- ☐ Proposed grades for bituminous and concrete paving comply with storm water management plan.
- ☐ Storm sewer material, sizes, and minimum grades comply with storm water management plan.
- ☐ Rear lot drainages comply with storm water management plan.
- ☐ Location, size, and detail of proposed restrictor.
- ☐ Trench detail, manhole detail, catchbasin detail, restrictor detail, curb detail, pavement detail, storm water detention basin detail, and top soil and seeding detail.
- ☐ Detailed hydrology and hydraulic calculations used for sizing storm sewer (can be submitted on separate form). Calculations must show there will be no adverse impacts upstream or downstream of proposed development.
- ☐ Calculations of maximum allowable discharge (obtain impervious factor from Township Engineer), on-site storage, storage volume, and size of restrictor.

Beyond Saginaw Charter Township requirements, the Developer must submit applications for permits with all agencies that regulate storm water within the area of development. These may include Michigan Department of Transportation, Michigan Department of Environmental Quality, Saginaw County Public Works Commissioner, Saginaw County Road Commission, and others.

SAGINAW CHARTER TOWNSHIP
STORM WATER DISCHARGE PERMIT

PROJECT NAME:	**Joe Development Complex**		
Property Tax Identification #:	**400-30-765-01**		
Planning Commission Approval #:	**234**		
Date Issued:	**8/28/02**		
Expiration Date:	**8/28/04**		
NAME OF DEVELOPER/OWNER:	**Developing a Must, Inc.**	**ENGINEER/ARCHITECT:**	**Engineering Big Projects**
Contact Person:	**Joe Development**	**Contact Person:**	**Jane Engineer**
Street Address	**1234 Any Street**	**Address:**	**Engineering Big Products Address**
City, State Zip:	**Any City, MI 22222**	**City, State Zip:**	**Engineering Big Products City, etc.**
Telephone:	**(989) 555-5555**	**Telephone:**	**(989) 444-4444**
Fax:	**(989) 555-5556**	**Fax:**	**(989) 444-4445**
PROJECT LOCATION:		**County:**	**Saginaw**
Street Address	**1234 Joe Development Street**	**Town - Range, Section :**	**T12N.-R4E. Section 12**
Village/City, State Zip:	**Saginaw Township, MI**	**Name of Subdivision/ Plat :**	**Reggie White Plat**
		Lot No. :	**345**

TYPE OF DEVELOPMENT:	
AREA OF DEVELOPMENT (ACRES):	
AREA OF CONTRIBUTING DRAINAGE DISTRICT (ACRES):	
AREA OF EXISTING ROOF AND PAVED (ACRES):	
TOTAL ROOF AND PAVED AFTER DEVELOPMENT (ACRES):	
OUTLET DRAIN:	
DESIGN IMPERVIOUS FACTOR:	
MAXIMUM ALLOWABLE DISCHARGE FROM SITE (CFS):	
ACTUAL RESTRICTED DISCHARGE (CFS):	
REQUIRED ON-SITE STORAGE (CUBIC FEET):	
STORAGE PROVIDED:	
RESTRICTORS SIZE AND LOCATION:	

INSPECTION REQUIREMENTS:

COMMENTS/COMPLIANCE REQUIREMENTS:

ATTACHMENTS: Approved Plans

cc: Saginaw Charter Township
Spicer Group, Inc.

PLEASE REFER TO BACK FOR ADDITIONAL INFORMATION REGARDING THIS PERMIT.

DAILY INSPECTION REPORT FORM

CHANGES TO PLANS AFTER APPROVAL:

1. Any changes made to the approved plan after issuance of the storm water permit shall require three sets of plans be submitted to the Township for review and approval.
2. Upon receipt of this information, it will determined if additional information, such as calculations, revised checklist, etc. will be required
3. The fee for review of any changes to the plan after approval will be billed on an hourly basis. An occupancy permit will not be issued until all changes have been approved and the Township has received all review fees.

FEE SCHEDULE:

The fee schedule for reviewing storm drainage submittals and performing inspection of drainage system construction is outlined below:

Type of review	Fee	Collection of Fees
Small Developments and Redevelopments (0 to 5 Acres)	$500	Fees added to Building Permit fee.
Large Developments and Redevelopments (5+ Acres)	Hourly, minimum fee of $600	Fees added to Building Permit fee.
All Condominium, Apartment and Platted Developments.	Hourly, minimum fee of $500 for rear lot only	$500 deposit collected prior to initiation of the review.
Determination if a redevelopment project is exempt from compliance.	$100	Fees added to Building Permit fee.

These permit fees include:

a) Pre-design meeting, if necessary.
b) Initial formal review
c) Review of requested changes made during first review.
d) First inspection of site upon completion.

An additional fee will be required for subsequent reviews beyond the first formal review and subsequent inspections beyond the first site inspection. The fee will be based on the actual hours needed to complete the subsequent reviews and inspections.

Condominium projects and Platted developments will receive a refund or be billed the difference between the $1,000 deposit and the actual cost.

INSPECTION/LETTER OF CERTIFICATION REQUIREMENTS:

Refer to Section II.E of the Storm Water Management Plan and this permit for minimum inspection and Letter of Certification requirements.

PENALTIES/ENFORCEMENT:

The Township will not award any contracts for the installation of the water or sanitary sewer utilities until such time as the storm water management plan has been approved by the Township Engineer.

APPEALS PROCESS:

If the developer is in disagreement with any of these reviews or inspections made by the Township and/or Township Engineer an appeal can be made with the Township Manager within 30 days of the review and/or inspection.

DAILY INSPECTION REPORT FORM

PROJECT NAME:	**WORK ORDER NO.:**	
CONTRACTOR:	**REPORT NO.**	
SUPERINTENDENT:	**DATE:**	
WEATHER: (CLEAR, CLOUDY, RAIN, SNOW)	**TEMPERATURE:**	**INSPECTOR:**

WORK FORCE ON SITE - NUMBER:	**TRADE**	**NUMBER:**	**TRADE**

EQUIPMENT IN USE (Number And Type)

WORK DONE (Location, Amount, And Type): (Be Specific)

TYPE OF UTILITY INSTALLED (Water, Sewer, Pavement, Size, Class, Description, Source):

GROUND CONDITIONS ENCOUNTERED (Clay, Sand, Wet, Dry, Good, Poor or Other & Detail Further):

BACKFILL INSTALLED:

EXISTING UTILITIES ENCOUNTERED:

RELOCATION OF PROPOSED UTILITY AND REASON NECESSARY:

MATERIAL DELIVERED TO SITE (Size, Class, Description, Source):

VISITORS TO WORK SITE (Name, Affiliation):

REMARKS:

NOTE: Complete in ink each day. Use reverse side if necessary.

By:_____Date:_____

SAGINAW CHARTER TOWNSHIP
DETENTION AND RESTRICTION
FINAL INSPECTION REPORT FORM

Name of Site Development:	
Planning Commission Approval Number:	
Location:	
Type of Development:*	
Size of Restrictor:	
Type of Restrictor:**	
Location of Restrictor:	
Required Detention (ft^3):	
Type of Detention:***	
Location of Detention:	
Do As-builts Conform to Present Site Conditions?	
Inspection Comments:	
Date of Inspection:	
Inspectors Name and Affilliation:	

* - Residential, Commercial, Subdivision, Etc.
** - Orifice in Outlet Pipe, Metering Outlet Pipe, Square Orifice, Etc.
*** - Parking Lot Ponding, Detention Basin, Etc.

SAGINAW CHARTER TOWNSHIP
STORM WATER MANAGEMENT

Contractor's Certification of Storm Sewer Construction

PROJECT NO: _____

PROJECT NAME: _____

SITE ADDRESS: _____

CONTRACTOR NAME: _____

ADDRESS: _____

CITY: _____ STATE: _____ ZIP: _____

MICHIGAN LICENSE NO: _____

I hereby certify that I am a licensed contractor in the State of Michigan. To the best of my knowledge, information and belief, the storm sewer system has been constructed in general conformance to the approved plans and specifications delivered to me by the Design Engineer. In my professional opinion, this site's storm sewer system is in compliance with Saginaw Charter Township Ordinance No. 583.

_____ _____
Printed Name and Title Date

_____ _____
Signature Date

WITNESSES:

_____ _____
Date

STATE OF MICHIGAN)
)ss.
COUNTY OF SAGINAW)

Subscribed and sworn to before me on the ____ day of _____, 200_, by

_____
Notary Public
Saginaw County, Michigan
My Commission Expires: _____

SAGINAW CHARTER TOWNSHIP
STORM WATER MANAGEMENT

Engineer's Certification of Storm Sewer Construction for Platted Developments and Condominium Projects, or Large Developments/Redevelopments (5 acres or greater)

PROJECT NO: _____

PROJECT NAME: _____

SITE ADDRESS: _____

ENGINEERING FIRM NAME: _____

ADDRESS: _____

CITY: _____ STATE: _____ ZIP: _____

I hereby certify that the storm sewer system installed has been inspected during construction and is in general conformance to the approved plans and specifications. In my professional opinion, this site's storm sewer system is in compliance with Saginaw Charter Township Ordinance No. 583.

_____ _____
Printed Name and Title Date

_____ _____
Signature Date

WITNESSES:

_____ _____
Date

STATE OF MICHIGAN)
)ss.
COUNTY OF SAGINAW)

Subscribed and sworn to before me on the ____ day of _____, 200_, by

_____
Notary Public
Saginaw County, Michigan
My Commission Expires: _____

REQUEST FOR EXEMPTION
SAGINAW CHARTER TOWNSHIP
STORM WATER MANAGEMENT PLAN
ORDINANCE No. 583

Development Name:_____

Development Location:_____

Total Area of Site:_____Acre(s)

Existing Impervious Area:_____Acre(s)

Proposed Impervious Area:_____Acre(s) % Change in Impervious area_____%

Has this site had a previous exemption? Yes_____ No_____

Is any existing impervious area being removed? Yes_____ No_____

Is any existing storm sewer being removed? Yes_____ No_____

Is any existing detention storage area being disturbed? Yes_____ No_____

Developer:

Name:_____

Contact Person:_____

Telephone:_____

Fax:_____

Engineer:

Name:_____

Contact Person:_____

Telephone:_____

Fax:_____

Note: A site plan, including the existing site features, proposed site features, and a location map must be included with this request form.

APPENDIX C

A. SAGINAW COUNTY LAND DEVELOPMENT ADVISORY COMMITTEE MEETINGS

B. MICHIGAN DEPARTMENT OF TRANSPORTATION
INDIVIDUAL APPLICATION & PERMIT FOR USE OF STATE TRUNKLINE RIGHT OF WAY

C. MICHIGAN DEPARTMENT OF TRANSPORTATION
STORM WATER DISCHARGE PERMIT APPLICATION

D. MICHIGAN DEPARTMENT OF ENVIRONMENTAL QUALITY JOINT PERMIT APPLICATION

E. SAGINAW COUNTY ROAD COMMISSION PERMIT APPLICATION

F. SAGINAW COUNTY SOIL EROSION AND SEDIMENTATION CONTROL PERMIT APPLICATION

G. NOTICE OF COVERAGE

H. BOARDWALK PLAT REQUIREMENTS

To assure that all agency forms are as up to date as possible, Saginaw Charter Township has provided the following web site addresses where various forms may be obtained for use by developers and their design engineers and architects.

SAGINAW COUNTY LAND DEVELOPMENT ADVISORY COMMITTEE MEETINGS:

http://saginawcounty.com/Docs/LDAC_Form.pdf

SAGINAW COUNTY SOIL EROSION AND SEDIMENT CONTROL PERMIT APPLICATION:

http://saginawcounty.com/Docs/SESC_Permit.pdf

SAGINAW COUNTY PUBLIC WORKS FOR TO WORK IN DRAIN RIGHT OF WAY

http://saginawcounty.com/Docs/Permit_application.pdf

SAGINAW COUNTY PUBLIC WORKS COMMISSIONER

http://saginawcounty.com/PublicWorks/Default.aspx

MICHIGAN DEPARTMENT OF TRANSPORTATION PERMITS:
STORM WATER DISCHARGE PERMIT:
http://mdotwas1.mdot.state.mi.us/public/webforms/public/2484.pdf

Contact MDOT Bay Region for permits to work in MDOT Right of Way.

MICHIGAN DEPTARTMENT OF ENVIRONMENTAL QUALITY (MDEQ):
For a Construction Site Permit where disturbance is more than 5 acres:
http://michigan.gov/deq/0,4561,7-135-3313_3682_3716-23997--,00.html

For a MDEQ Joint Permit:
http://michigan.gov/deq/0,1607,7-135-3307_29692_24403---,00.html

SAGINAW AREA STORM WATER AUTHORITY (SASWA) – Storm water information

www.saswa.org

BOARDWALK PLAT REQUIREMENTS

Declaration of Protective
Covenants of the Plat of
Boardwalk Subdivision, Saginaw
Township, Saginaw County, Michigan.

On this _____day of _____, 1984, JON C. SAWYER, a single man; ALICE E. FISHER; WALTER E. FISHER, a single man; and ALBERT H. FISHER, a single man, do hereby declare that they are the sole fee owners and land contract purchasers, of a parcel of land located in the Township of Saginaw, County of Saginaw and State of Michigan, described as follows:

Boardwalk Plat, Part of the Southeast 1/4 of Section 10, Town 12 North, Range 4 East, Saginaw Township, Saginaw County, Michigan: To fix the point of beginning, commence at the East 1/4 corner of Section 10; thence South 00 degrees, 11' 06" East, on the East Line of said Section, 1,021.26 feet; thence North 89 degrees, 48' 49" West, on a line which is parallel with and 296.00 feet, North of the South 1/8 line of said Section, 40.00 feet to the point of beginning of this description; thence North 89 degrees 48' 49" West, parallel to said South 1/8 line, 550.00 feet; thence South 00 degrees, 11' 06" East, parallel to said East Section line, 296.00 feet to the South 1/8 line of Section 10; thence North 89 degrees, 48' 49" West, on said 1/8 line, 225.58 feet to the East line of the Edward Meyer & Son Plat, according to the plat thereof recorded in Liber 7, Pages 24 and 25 of Plats, Saginaw County Records; thence North 00 degrees 06' 49" West, on said East line of said plat. 0.70 foot to the Northeast corner of Cristom Place, as dedicated in said plat; thence North 89 degrees, 43' 19" West, on the North line of said Cristom Place, 489.55 feet to the Southeast corner of Lot 32 of said Edward Meyer & Son Plat; thence North 00 degrees, 07' 13" West, on the East line of Lots 32 through 40 inclusive of said Edward Meyer & Son Plat, 657.96 feet to a point on the North line of the South 1/2 of the Northeast 1/4 of the Southeast 1/4 of said Section 10, which is 0.59 foot, North 89 degrees 46' 40" West, from the Southwest corner of Lot 11 of the Bay Road Commercial Park, according to the plat thereof recorded in Liber 18, Pages 11 and 12 of Plats, Saginaw County Records; thence South 89 degrees, 46'40" East, on said North line of said South 1/2 of the Northeast 1/4 of the Southeast 1/4 and also on the South line of said Bay Road Commercial Park, 994.39 feet; thence South 00 degrees, 11' 06" East, parallel with said East Section line 75.00 feet; thence South 89 degrees, 46' 40" East, parallel to said South line of Bay Road Commercial Park, 270.00 feet; thence South 00 degrees, 11' 06' East, on a line which is parallel with and 40.00 feet, measured at

right angles, West of said East Section line, 287.66 feet to the point of beginning. 1 to 12, inclusive.

That the above described land is for development as a commercial subdivision and that the following covenants, conditions and restrictions shall apply to those portions of the property as set forth therein.

I.

STORM WATER RETENTION FOR LOTS 1 THRU 9, INCLUSIVE OF BOARDWALK PLAT

On-site storm water retention is provided within the easements shown on Lots 1, 2 and 3 for the roofing and paving of up to 50% of the area for Lots 1 thru 9, inclusvive.

Any additional retention capacity required for an individual lot under Ordinance No. 237 of the Township of Saginaw, Saginaw County, Michigan Ordinances must be provided by the owner upon the land embraced by his ownership.

II.

STORM WATER RETENTION FOR LOTS 10, 11 and 12 OF BOARDWALK PLAT

Storm sewers are installed within easements to provide for the surface drainage of Lots 10, 11 and 12.

The outlet capacity for Lots 10, 11 and 12 is limited to a total of 0.8 cubic feet per second for all three lots. Therefore, on-site storm waterr retention shall be required for these lots.

The owners of these lots agree to provide on-site storm water retention on individual lots, as required under Ordinance No. 237 of the Township of Saginaw, Saginaw County, Michigan Ordinances.

Signed, sealed and
delivered in the
presence of:

_____

_____

_____

_____

_____

JON C. SAWYER
~~4875~~ Fortune Boulevard
Saginaw, Michigan, 48603

_____

ALICE E. FISHER
2522 Cooper
Saginaw, Michigan

WALTER E. FISHER
4465 North Graham Road
Freeland, Michigan 48623

ALBERT H. FISHER
2515 Cooper
Saginaw, Michigan 48602

ACKNOWLEDGEMENT

STATE OF MICHIGAN)
COUNTY OF SAGINAW)SS

Personally came before me this ____day of _____, 1984, the above named JON C. SAWYER, a single man; ALICE E. FISHER; WALTER E. FISHER, a single man, and ALBERT H. FISHER, a single man, to me known to be the persons who executed the foregoing instrument and acknowledged that they executed the same same as their free act and deed.

Notary Public
Saginaw County, Michigan
My Commission Expires: _____

APPENDIX D

Saginaw Charter Township Ordinance No. 583

03-057

RESOLUTION

BE IT RESOLVED that a document designated STORM WATER MANAGEMENT PLAN "the plan": Requirements and General Compliance Guidelines for Storm Water Drainage System Design for Development and Redevelopment Projects within Saginaw Charter Township, including Appendix A-G, dated August, 2002 prepared by Spicer Group for Saginaw Charter Township and for the purpose of aiding developers in the design of storm water run-off collection and detention systems is hereby approved and adopted.

BE IT FURTHER RESOLVED that copies of the plan, as from time to time amended, shall be filed with the Township Clerk and with the Community Development Department and shall be available for inspection and copying during regular business hours.

It was moved by Schaeff and supported by Gerhardt that the above set forth resolution be adopted at a regular meeting of the Saginaw Charter Township Board held on Monday, September 8, 2003.

The vote on the above set forth Resolution was as follows:

Yeas: Clerk Braun, Treasurer McQuillan, Trustees Ewend, Gerhardt, Neiderquill, and Schaeff

Nays: _____

Absent: Supervisor Olson

The Resolution was declared adopted.

GEORGE L. OLSON, Supervisor

TIMOTHY J. BRAUN, Clerk

CERTIFICATE

I hereby certify that the foregoing is a true and complete copy of a Resolution adopted by the Township Board of Saginaw Charter Township at a regular meeting of said Board held on Monday, September 8, 2003.

TIMOTHY J. BRAUN, CLERK

APPENDIX E

Design Examples

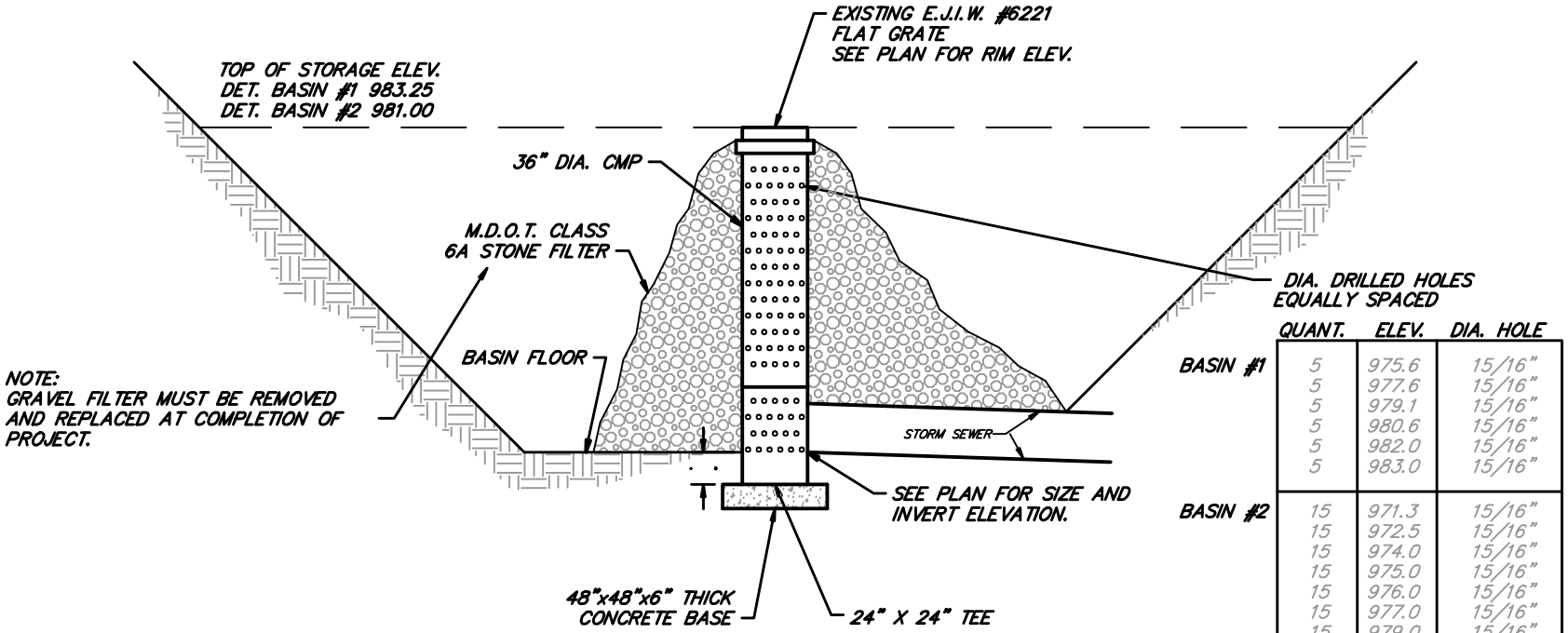

	QUANT.	ELEV.	DIA. HOLE
BASIN #1	5	975.6	15/16"
	5	977.6	15/16"
	5	979.1	15/16"
	5	980.6	15/16"
	5	982.0	15/16"
	5	983.0	15/16"
BASIN #2	15	971.3	15/16"
	15	972.5	15/16"
	15	974.0	15/16"
	15	975.0	15/16"
	15	976.0	15/16"
	15	977.0	15/16"
	15	979.0	15/16"

EXISTING STANDPIPE DETAIL

NOT TO SCALE

-PROTECT ALL SLOPES 3:1 AND STEEPER, INCLUDING THE TOP OF BERM ADJACENT TO THESE SLOPES, W/ SOIL EROSION CONTROL BLANKET (C300 AS MANUF. BY NORTH AMERICAN GREEN (NAG)) INSTALL PER MANUF. GUIDELINES.

-STRAW MULTCH BLANKET SHALL BE INSTALLED ON ALL SLOPES FLATTER THAN 3:1 (S75 AS MANUF. BY NAG, INSTALLED PER MANUF. GUIDELINES)

NOTE:
-GRAVEL FILTRATION JACKET CONSISTING OF 3" WASHED STONE AND 1" WASHED STONE SHALL BE PLACED AROUND RISER PIPE.
-THE ORIFICE CONFIGURATION SHALL BE WRAPPED WITH 1" NOMINAL OPENING HARD WIRE MESH TO PREVENT ANY STONE FROM PASSING THROUGH THE ORIFICES.
-THE 3" STONE SHALL BE PLACED IMMEDIATELY ADJACENT TO THE RISER PIPE WITH THE 1" STONE COVERING THE LARGER STONE.

DRILLED HOLES CHART

QUANT.	DIA. (INCH)	ELEV.
4	1.0"	853.0
3	2.0"	856.9
3	4.0"	859.9

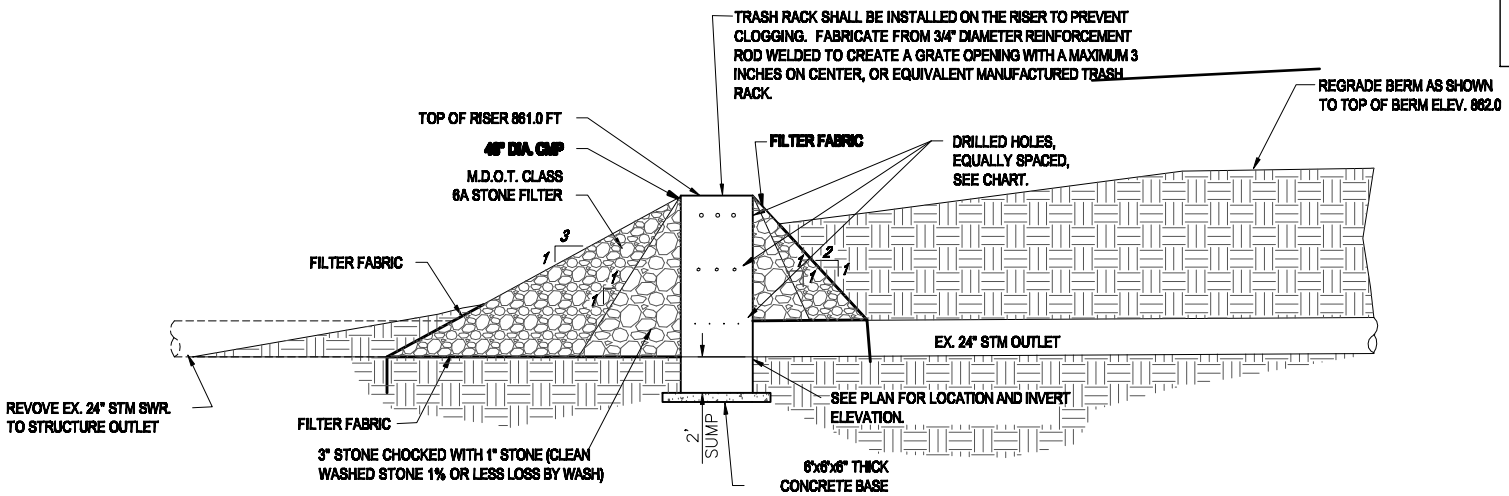

DETENTION BASIN OUTLET DETAIL

NOT TO SCALE

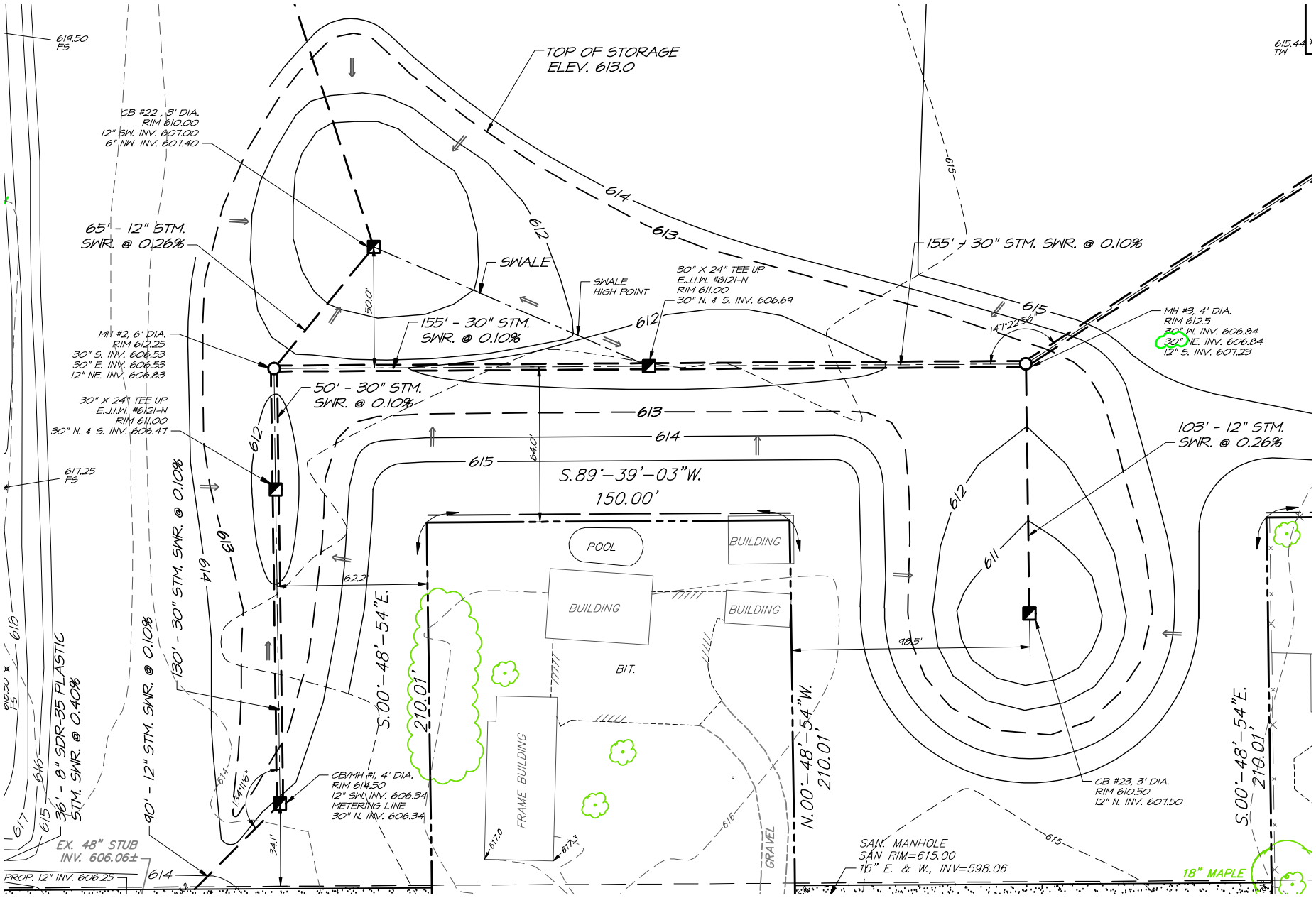
TOP OF STORAGE
ELEV. 613.0
CB #22, 3' DIA.
RIM 610.00
12" SW. INV. 607.00
6" NW. INV. 607.40
65' - 12" STM.
SWR. @ 0.26%
SWALE
SWALE
HIGH POINT
30" X 24" TEE UP
E.J.I.W. #6121-N
RIM 611.00
30" N. & S. INV. 606.69
155' - 30" STM. SWR. @ 0.10%
155' - 30" STM. SWR. @ 0.10%
MH #3, 4' DIA.
RIM 612.5
30" W. INV. 606.84
30" NE. INV. 606.84
12" S. INV. 607.23
MH #2, 6' DIA.
RIM 612.25
30" S. INV. 606.53
30" E. INV. 606.53
12" NE. INV. 606.83
30" X 24" TEE UP
E.J.I.W. #6121-N
RIM 611.00
30" N. & S. INV. 606.47
50' - 30" STM.
SWR. @ 0.10%
103' - 12" STM.
SWR. @ 0.26%
S.89°-39'-03"W.
150.00'
POOL
BUILDING
BUILDING
BUILDING
BIT.
FRAME BUILDING
GRAVEL
S.00°-48'-54"E.
210.01'
N.00°-48'-54"W.
210.01'
S.00°-48'-54"E.
210.01'
130' - 30" STM. SWR. @ 0.10%
90' - 12" STM. SWR. @ 0.10%
36' - 8" SDR-35 PLASTIC
STM. SWR. @ 0.40%
CB/MH #1, 4' DIA.
RIM 614.50
12" SW. INV. 606.34
METERING LINE
30" N. INV. 606.34
CB #23, 3' DIA.
RIM 610.50
12" N. INV. 607.50
SAN. MANHOLE
SAN RIM=615.00
15" E. & W., INV=598.06
EX. 48" STUB
INV. 606.06±
PROP. 12" INV. 606.25
18" MAPLE
619.50
FS
617.25
FS
615.44
TW
147°22'50"
98.5'
62.2'
64.0'
50.0'
34.1'
34°11'16"
617.0
617.3

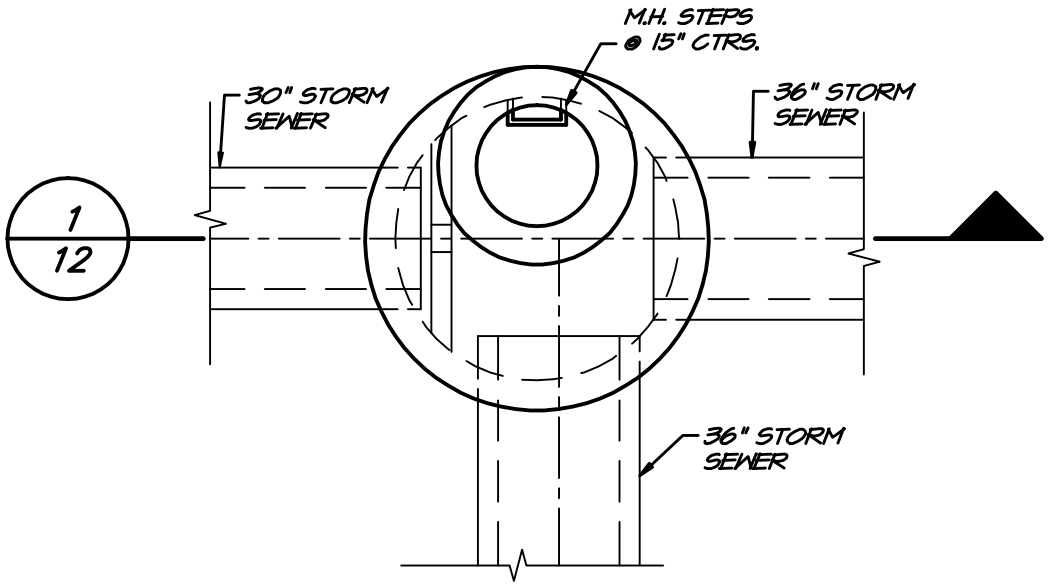

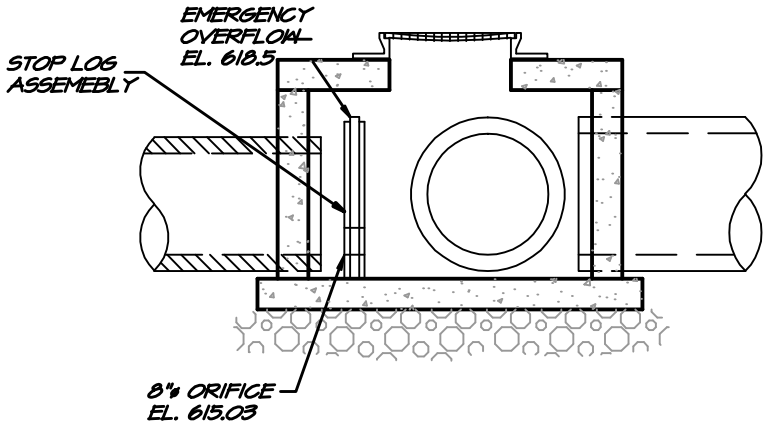

1/12 **SECTION**
NOT TO SCALE

7' DIA. MANHOLE W/ EMERGENCY OVER FLOW

NOT TO SCALE

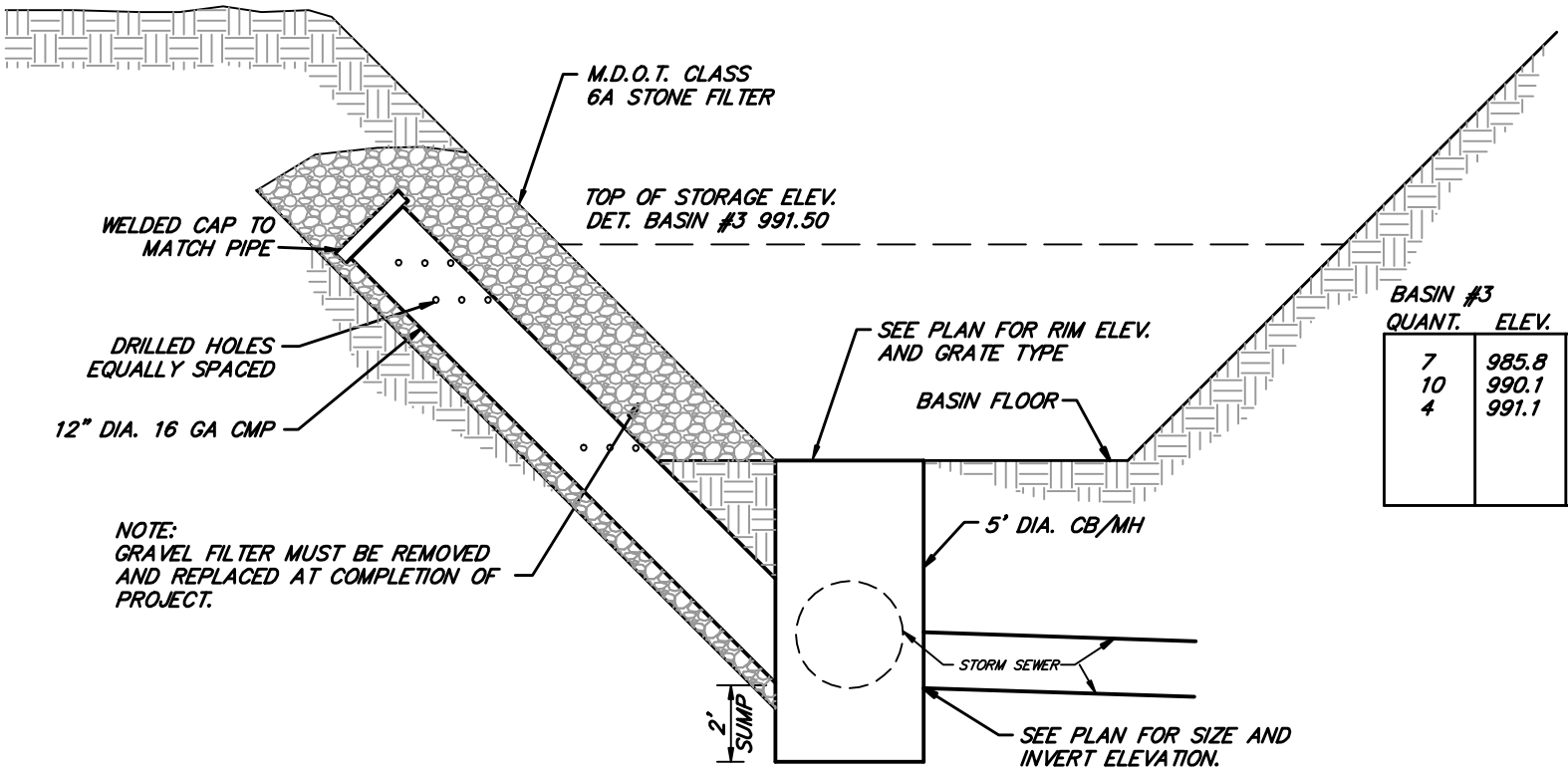

BASIN #3

QUANT.	ELEV.	DIA. HOLE
7	985.8	3/4"
10	990.1	3/4"
4	991.1	3-1/2"

PROPOSED STANDPIPE DETAIL

NOT TO SCALE

ACAD FILE: WORKORDER NUMBER: PLOT SCALE:

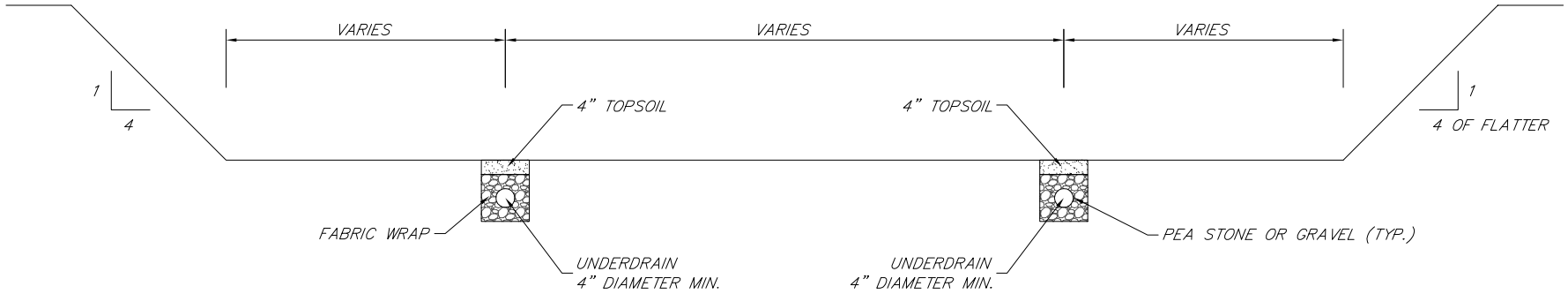

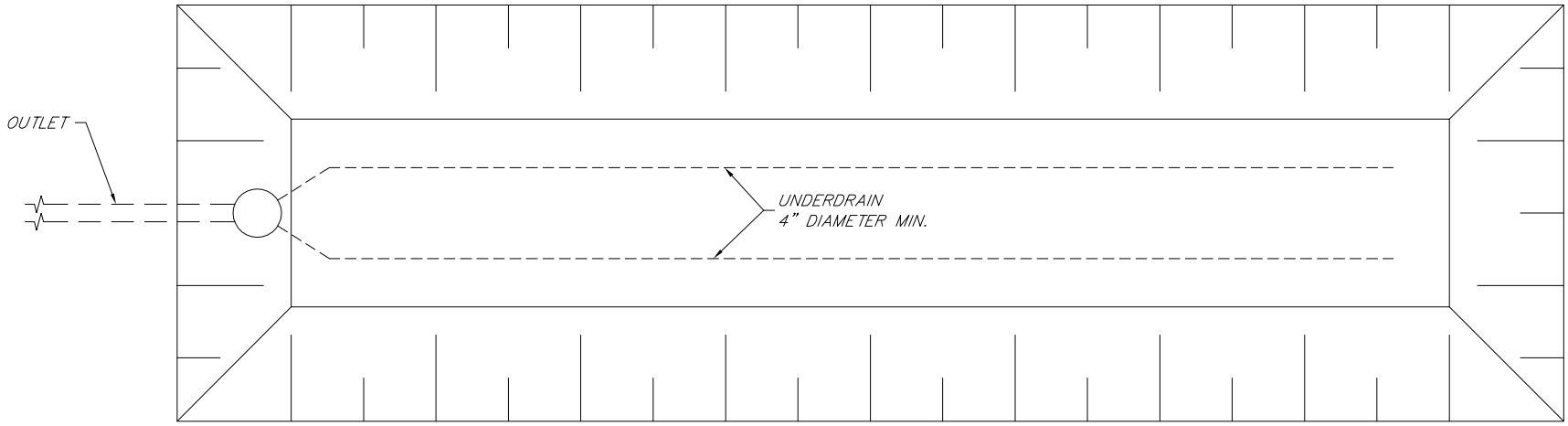

UNDERDRAIN DETAIL

NOT TO SCALE

TO BE USED IF SLOPES ON DETENTION BASIN
DRAINAGE AREA 1.5% OR LESS

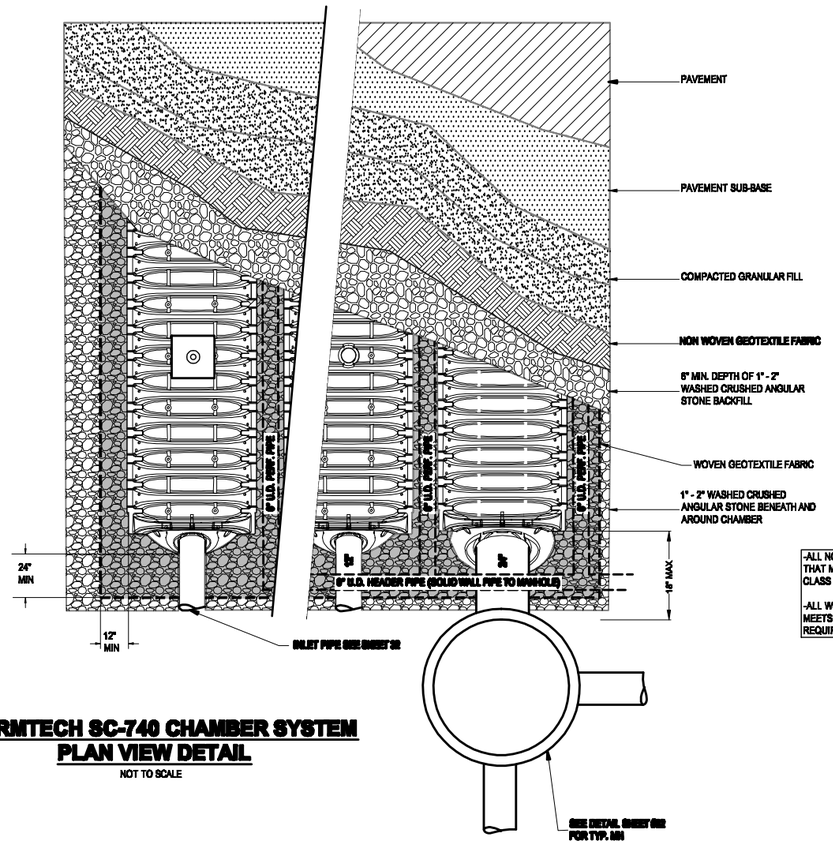

STORMTECH SC-740 CHAMBER SYSTEM
PLAN VIEW DETAIL

NOT TO SCALE

-ALL NON-WOVEN GEOTEXTILE THAT MEETS AASHTO M288 CLASS 2 REQUIREMENTS FABRIC

-ALL WOVEN GEOTEXTILE THAT MEETS AASHTO M288 CLASS 1 REQUIREMENTS FABRIC

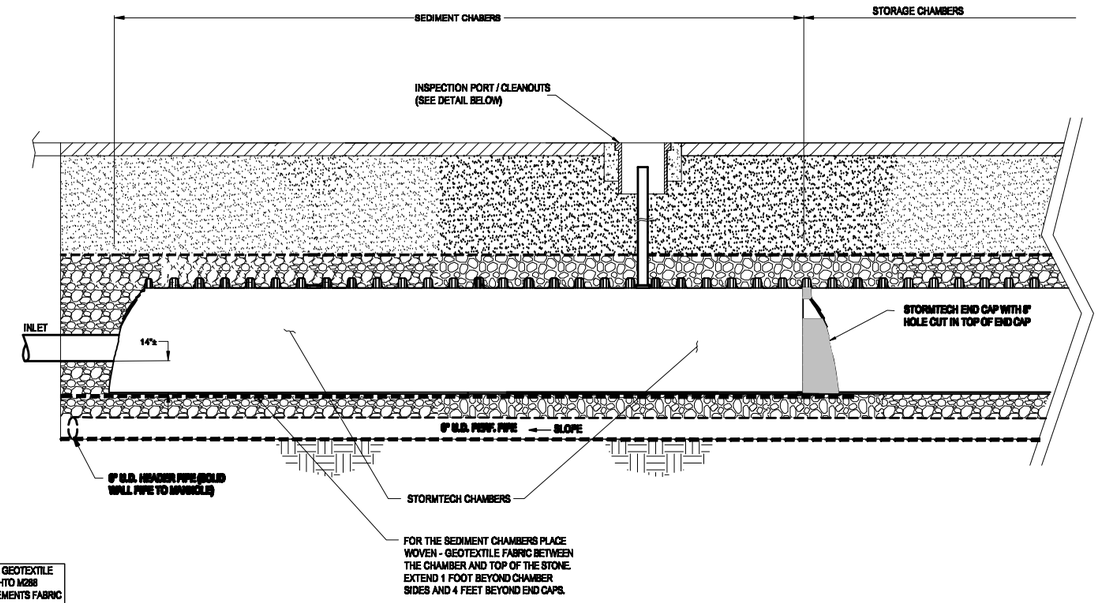

STORMTECH SC-740 CHAMBER SYSTEM
SECONDARY SEDIMENT TRAP SYSTEM

NOT TO SCALE

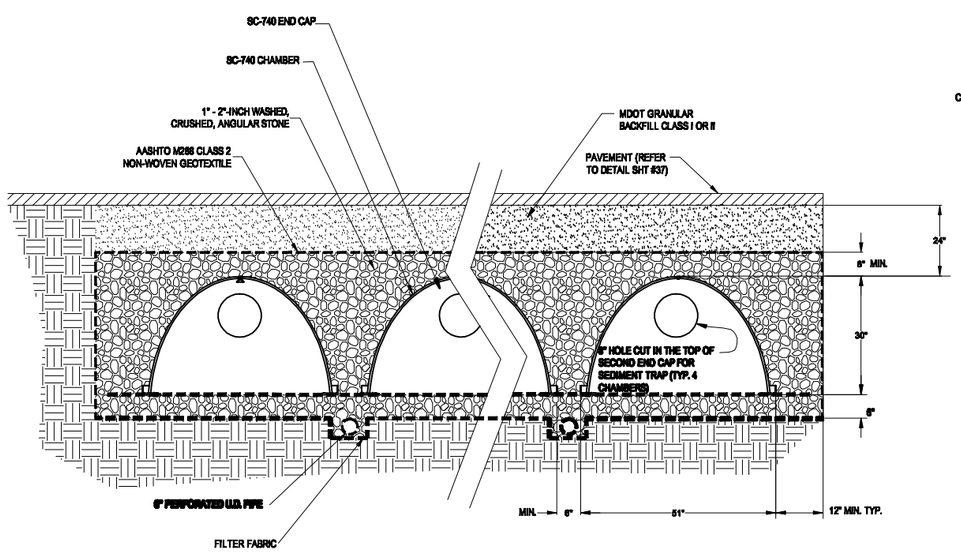

STORMTECH SC-740 CHAMBER SYSTEM
TYPICAL CROSS SECTION DETAIL

NOT TO SCALE

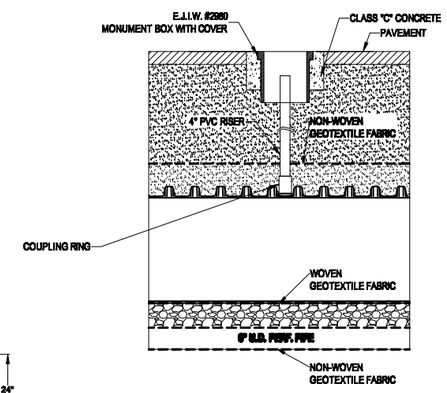

STORMTECH SC-740 CHAMBER SYSTEM
INSPECTION PORT DETAIL

NOT TO SCALE

REFER TO MANUFACTURERS INSTALLATION RECOMMENDATIONS FOR THE STORMTECH SYSTEM

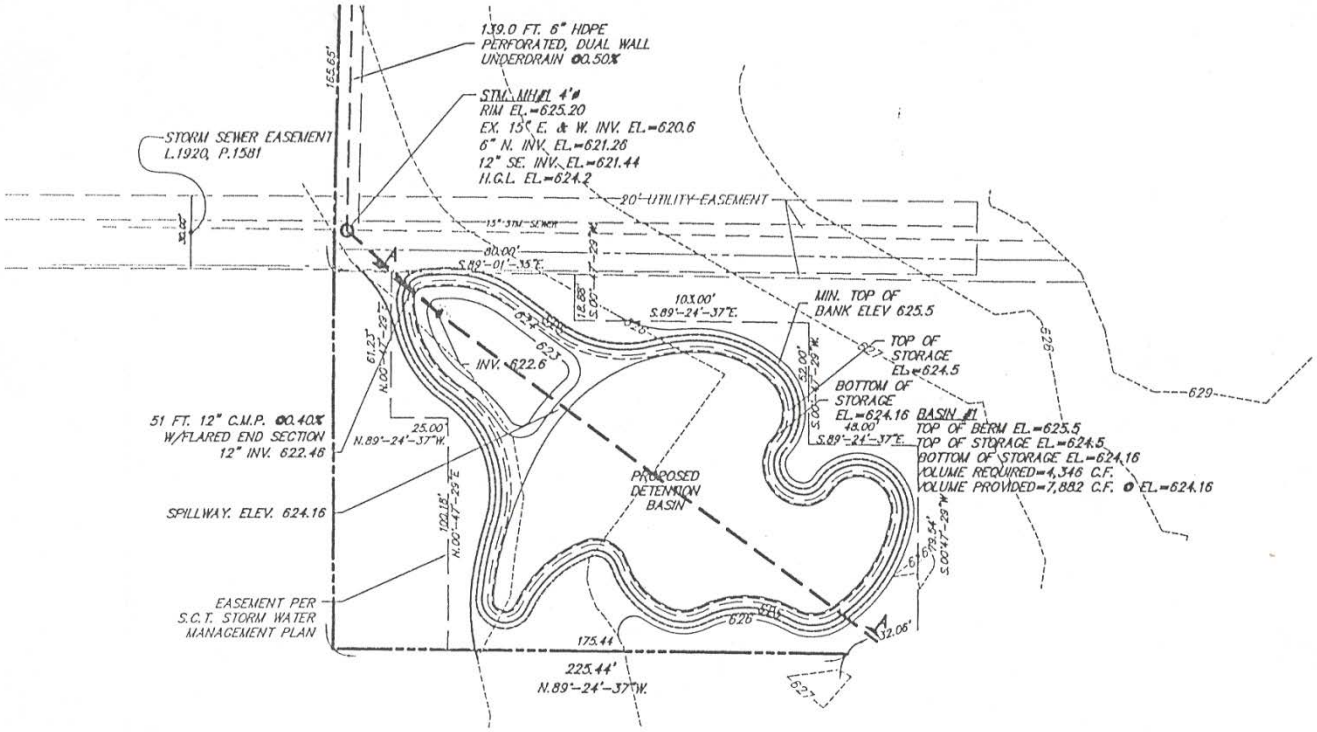

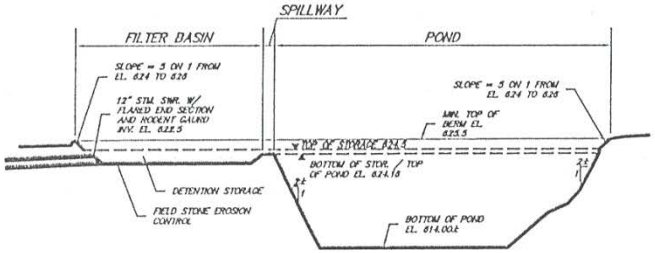

POND SECTION A-A

Spicer group

SAGINAW TOWNSHIP

APPENDIX F

Maintenance Plans and Budget Sample

Maintenance Plan and Budget

Sample Maintenance Plan and Budget

"XYZ" Leasing Company

Storm Water Management System Maintenance Plan

I. Responsibility for Maintenance

A. During construction, it is the developer's responsibility to perform the maintenance.

B. Following construction, it will be the responsibility of "XYZ" Leasing Company to perform the maintenance.

C. The Master Deed will specify that routine maintenance of the storm water facilities must be completed within ___ days of receipt of written notification that action is required, unless other acceptable arrangements are made with the (Township of _____), (Saginaw County Public Works Commissioner) or successors. Emergency maintenance (i.e. when there is endangerment to public health, safety or welfare) shall be performed immediately upon receipt of written notice. Should "XYZ" Leasing Company fail to act within these time frames, the (Township) (County) or successors may perform the needed maintenance and assess the costs against "XYZ" Company.

II. Source of Funding

A. "XYZ" Leasing Company is required to pay all maintenance activities on a continuing basis.

III. Maintenance Tasks and Schedule

A. See the charts on the next two pages: The first describes maintenance tasks during construction to be performed by the developer. The second describes maintenance tasks to be performed by "XYZ" Leasing Company.

B. Immediately following construction, the developer will have the storm water management system inspected by an engineer to verify grades of the detention and filtration areas and make recommendations for any necessary sediment removal

Maintenance Plan Budget (example)

Annual inspection for sediment accumulation	$ 100.00
Removal of sediment accumulation every 2 years as needed	$ 500.00
Inspect for floatables and debris annually and after major storms	$ 100.00
Removal of floatables and debris annually and after major storms	$ 150.00
Inspect system for erosion annually and after major storms	$ 100.00
Re-establish permanent vegetation on eroded slopes as needed	$ 350.00
Replacement of stone	$ 100.00
Mowing 0-2 times per year	$ 400.00
Inspect structural elements during wet weather and compare to as-built plans every 2 years	$ 150.00
Make structural adjustments or replacements as determined by inspection as needed	$ 400.00
Have professional engineer carry out emergency inspections upon identification of several problems	$ 200.00
Budget	$ 2,550.00

NOTE: Maintenance Plans and budgets vary widely due to the size and unique characteristics of each storm water management system proposed. The budget is intended for use as a starting point in the development of an appropriate maintenance plan specific to the size and components of each system.

APPENDIX G

Rear Lot Design Examples

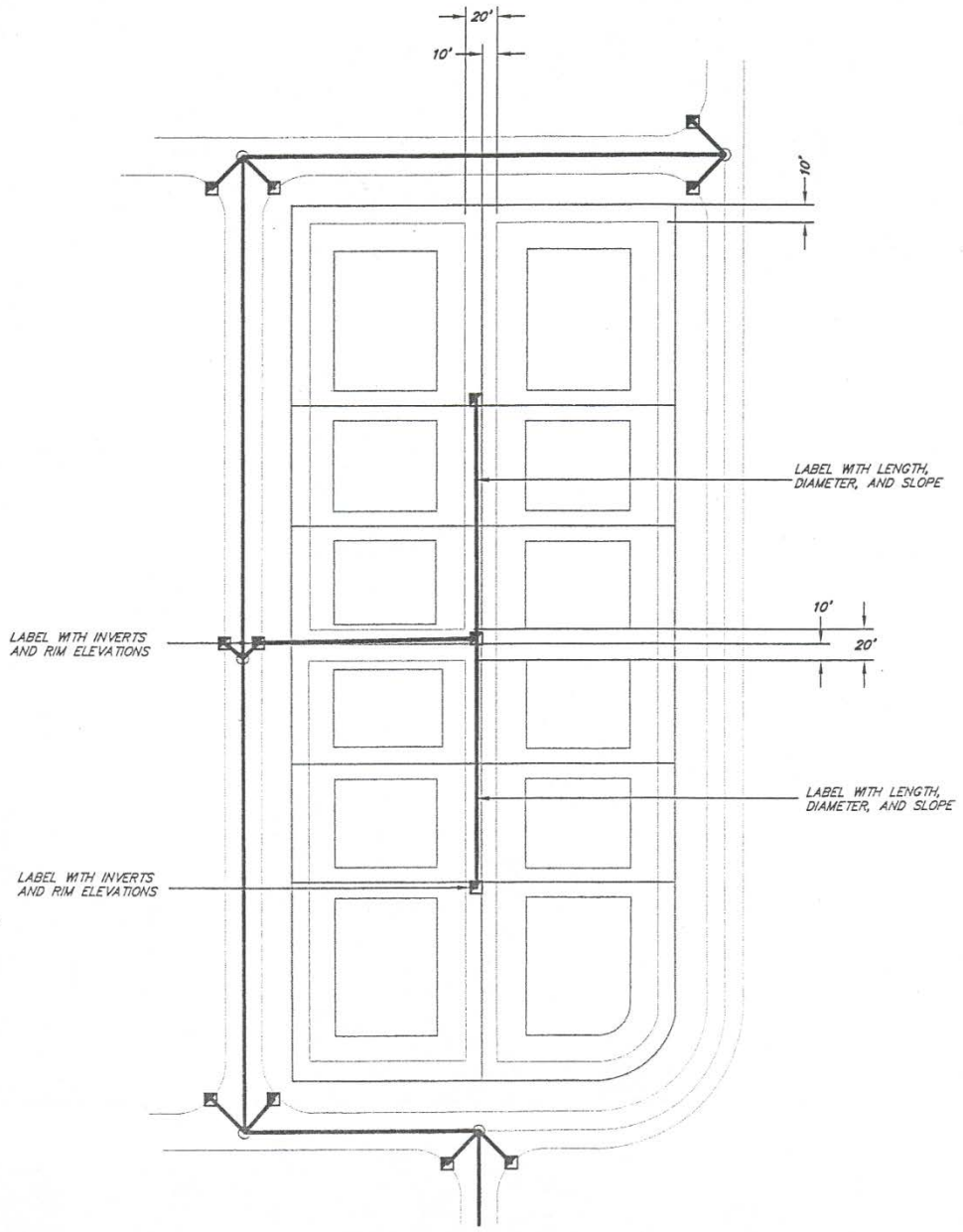
20'
10'
10'
LABEL WITH LENGTH, DIAMETER, AND SLOPE
10'
20'
LABEL WITH INVERTS AND RIM ELEVATIONS
LABEL WITH LENGTH, DIAMETER, AND SLOPE
LABEL WITH INVERTS AND RIM ELEVATIONS

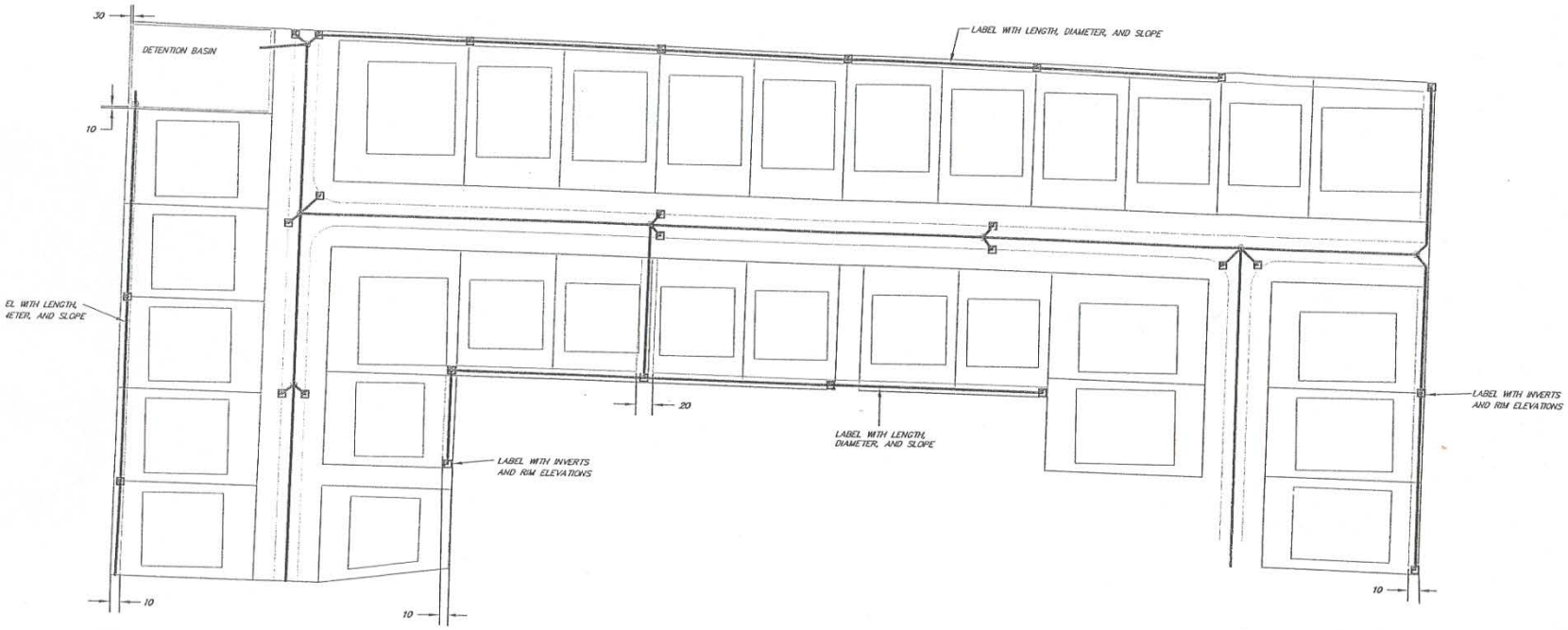
30
DETENTION BASIN
10
LABEL WITH LENGTH, DIAMETER, AND SLOPE
EL WITH LENGTH,
IETER, AND SLOPE
20
LABEL WITH LENGTH,
DIAMETER, AND SLOPE
LABEL WITH INVERTS
AND RIM ELEVATIONS
LABEL WITH INVERTS
AND RIM ELEVATIONS
10
10
10

APPENDIX H

Saginaw Township Drainage District Base Map

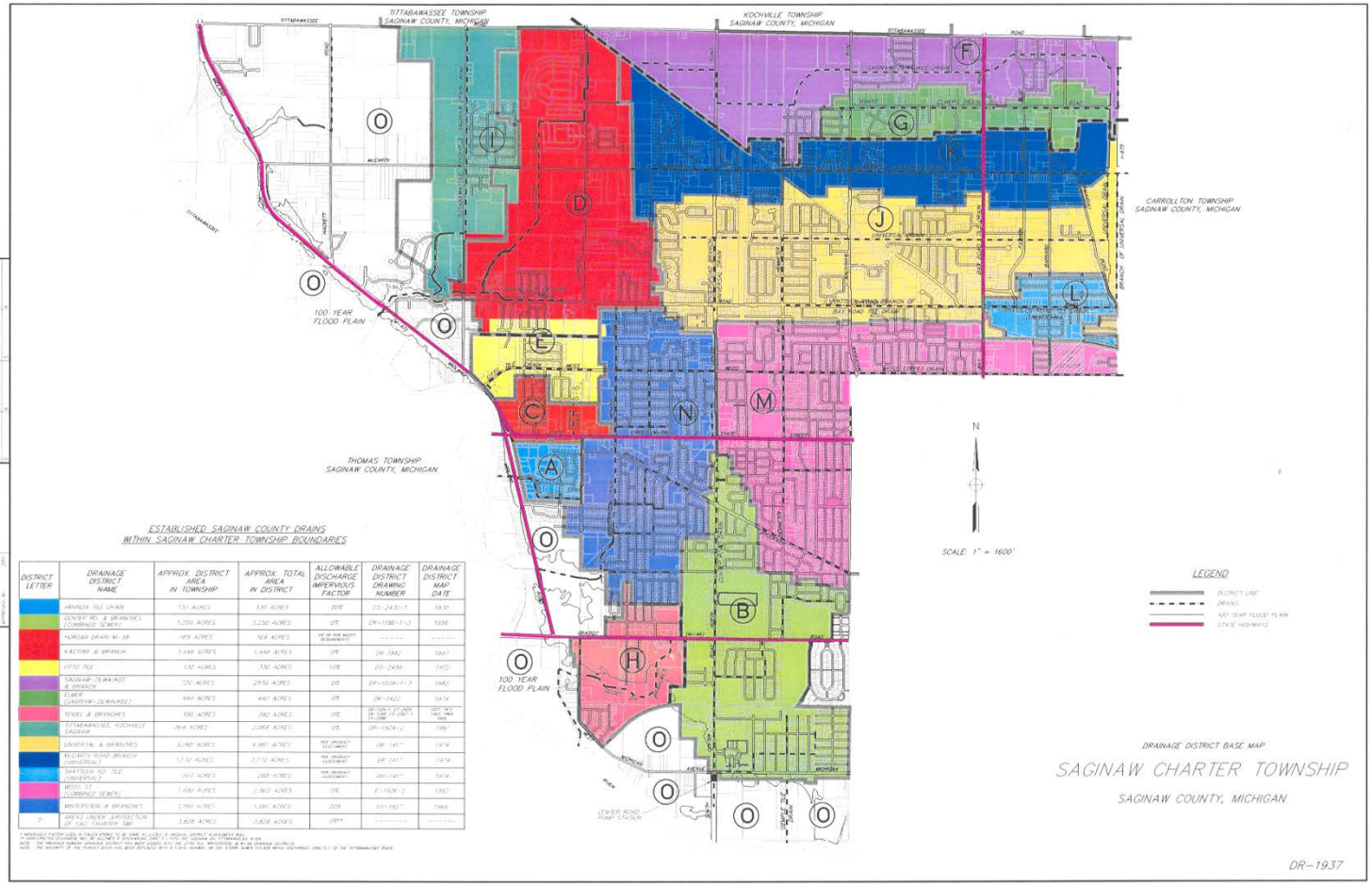

DRAINAGE DISTRICT BASE MAP

SAGINAW CHARTER TOWNSHIP

SAGINAW COUNTY, MICHIGAN

DR-1937

ESTABLISHED SAGINAW COUNTY DRAINS
WITHIN SAGINAW CHARTER TOWNSHIP BOUNDARIES

DISTRICT LETTER	DRAINAGE DISTRICT NAME	APPROX. DISTRICT AREA IN TOWNSHIP	APPROX. TOTAL AREA IN DISTRICT	ALLOWABLE DISCHARGE IMPERVIOUS FACTOR	DRAINAGE DISTRICT DRAWING NUMBER	DRAINAGE DISTRICT MAP DATE
🟦	AMANDA TILE DRAIN	130 ACRES	130 ACRES	20%	CS-2430-1	1970
🟩	CENTER RD. & BRANCHES (COMBINED SEWER)	1,250 ACRES	1,250 ACRES	0%	DR-1196-1-2	1956
🟥	MORGAN DRAIN/M-58	169 ACRES	169 ACRES	0% OR PER MDOT REQUIREMENTS	------	------
🟥	KASTORF & BRANCH	1,448 ACRES	1,448 ACRES	0%	DR-1942	1987
🟨	OTTO TILE	330 ACRES	330 ACRES	10%	DS-2499	1972
🟪	SAGINAW-ZILWAUKEE & BRANCH	320 ACRES	2930 ACRES	0%	DR-1509-1-3	1982
🟩	ELMER (SAGINAW-ZILWAUKEE)	440 ACRES	440 ACRES	0%	DR-1422	1974
🟥	SEIGEL & BRANCHES	390 ACRES	390 ACRES	0%	[illegible]	[illegible]
🟩	TITTABAWASSEE, KOCHVILLE SAGINAW	864 ACRES	2,068 ACRES	0%	DR-1924-2	1997
🟨	UNIVERSAL & BRANCHES	3,280 ACRES	4,987 ACRES	PER ORIGINAL* ASSESSMENT	DR-1417	1974
🟦	McCARTY ROAD BRANCH (UNIVERSAL)	1,170 ACRES	1,170 ACRES	PER ORIGINAL* ASSESSMENT	DR-1417	1974
🟦	SHATTUCK RD. TILE (UNIVERSAL)	260 ACRES	260 ACRES	PER ORIGINAL* ASSESSMENT	DR-1417	1974
🟪	WEISS ST. (COMBINED SEWER)	1,400 ACRES	2,160 ACRES	0%	E-1926-2	1992
🟦	WINTERSTEEN & BRANCHES	1,180 ACRES	1,180 ACRES	20%	DS-1927	1969
O	AREAS UNDER JURISDICTION OF SAG. CHARTER TWP.	3,828 ACRES	3,828 ACRES	0%**	------	------

* IMPERVIOUS FACTOR USED IN CALCULATIONS TO BE SAME AS LISTED IN ORIGINAL DISTRICT ASSESSMENT ROLL.

** UNRESTRICTED DISCHARGE WILL BE ALLOWED IF DISCHARGING DIRECTLY INTO THE SAGINAW OR TITTABAWASSEE RIVER.

NOTE: THE PREVIOUS MORGAN DRAINAGE DISTRICT HAS BEEN DIVIDED INTO THE OTTO TILE, WINTERSTEEN, & M-58 DRAINAGE DISTRICTS.

NOTE: THE MAJORITY OF THE MORGAN DITCH HAS BEEN REPLACED WITH A STATE HIGHWAY (M-58) STORM SEWER SYSTEM WHICH DISCHARGES DIRECTLY TO THE TITTABAWASSEE RIVER.

SAGINAW CHARTER TOWNSHIP